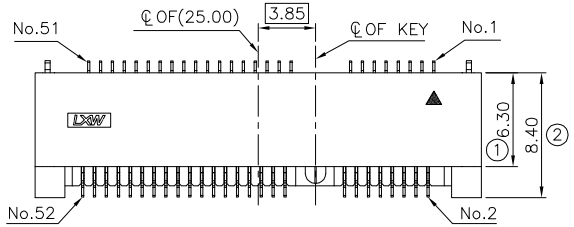

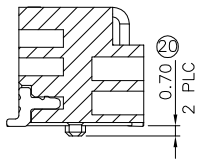

SECTION A-A

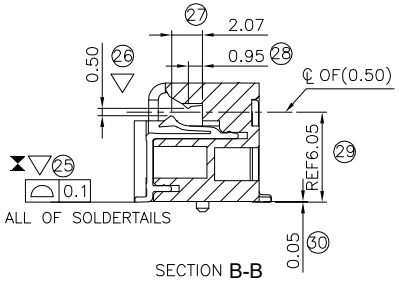

SECTION B-B

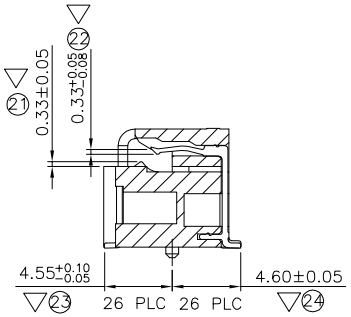

SECTION C-C

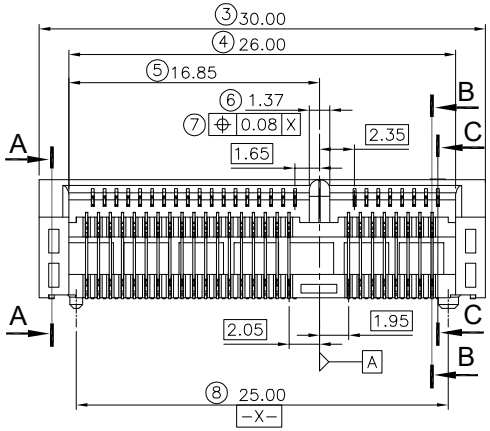

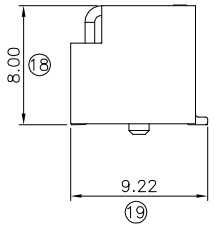

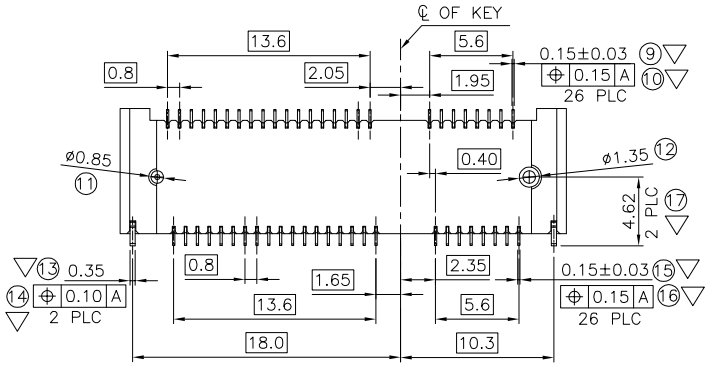

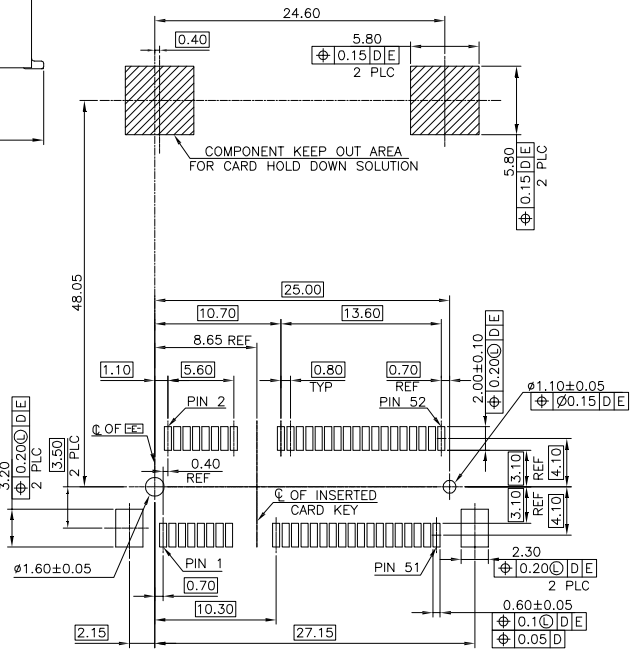

-D- IS THE TOP SURFACE OF PCB.

RECOMMENDED P.C.BOARD PATTERN LAYOUT

MATERIAL
- HOUSING : THERMO PLASTIC UL94V-0 BLACK
- CONTACT : COPPER ALLOY
- PEG : COPPER ALLOY

SPECIFICATION
- CURRENT RATING : 0.5A 50V AC/DC
- CONTACT RESISTANCE : 55 mΩ MAX
- INSULATION RESISTANCE : 500 MΩ MIN AT 500V DC
- OPERATING TEMPERATURE : -55°C~80°C

LP3880-*52-B0R

- PACKING: R:REEL
- 0:STANDARD SPECIFICATIONS
- COLOR:BLACK
- PIN
- PLATING TYPE G:1u" Au Min(GOLD FLASH) 3:3u" Au Min F:10u" Au Min
- HEIGHT:80--8.0H
- 0.80 PITCH
- LXWCONN MINI PCI CONNECTOR SERIES

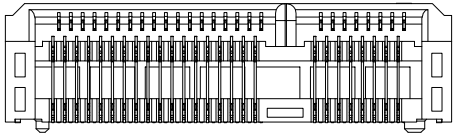

WITH C/ANGLE TYPE

RoHS Compliant 2013/95/EC

Pb Process Capable

修订 SER	修 改 摘 要 REVISION DESCRIPTION	签 名 SIGNATURE	日期 DATE

一般公差 GENERAL TOLERANCE
.X ±0.35
.XX ±0.25
.XXX ±0.10
ANGLES ±1°

版本 (REV): A

LXW 连兴旺电子(深圳)有限公司
connectivity LXWCONN ELECTRONICS(SHENZHEN)CO.,LTD

制图 (DR): Jerry 2020.03.21
审核 (CHKD):
核准 (APPD): Tong 2020.03.21

品名(TITLE): 0.80MM PITCH MINI PCI EXPRESS H=8.0mm CONNECTOR

料号(PART NO): LP3880-*52-B0R

比例(SCALE)	单位(UNITS)	张数(SHEET)	图幅(SIZE)
1:1	mm	1 OF 1	A4