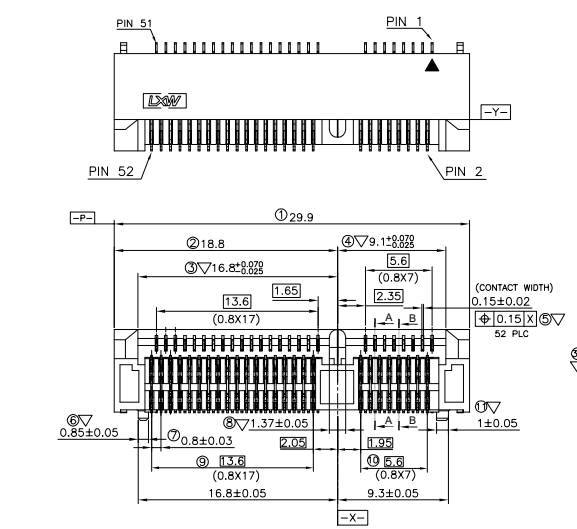

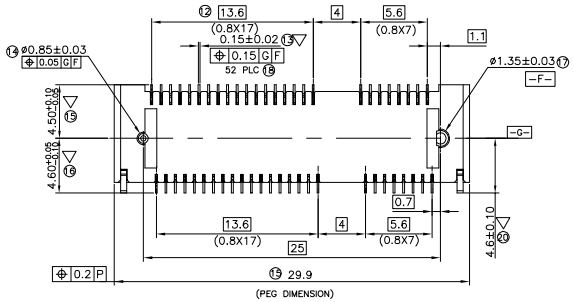

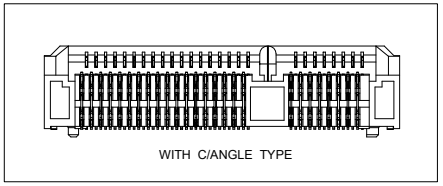

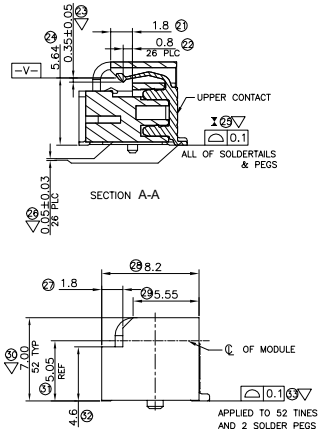

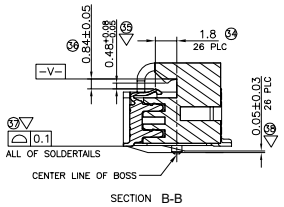

MATERIAL
- HOUSING : THERMO PLASTIC UL94V-0 BLACK
- CONTACT : COPPER ALLOY
- PEG : COPPER ALLOY

SPECIFICATION
- CURRENT RATING : 0.5A 50V AC/DC
- CONTACT RESISTANCE : 55 mΩ MAX
- INSULATION RESISTANCE : 500 MΩ MIN AT 500V DC
- OPERATING TEMPERATURE : -55°C~80°C

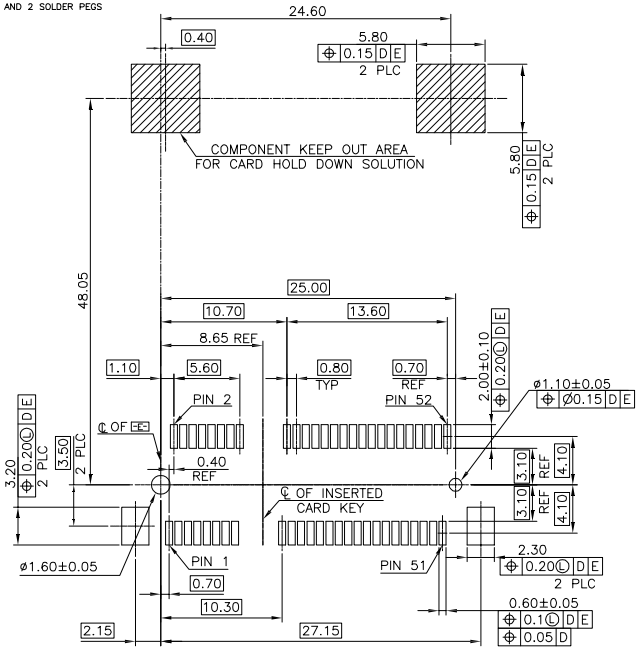

-D- IS THE TOP SURFACE OF PCB.

RECOMMENDED P.C.BOARD PATTERN LAYOUT

L P 3 8 7 0 — * 5 2 — B 0 R

- PACKING: R:REEL
- 0:STANDARD SPECIFICATIONS
- COLOR:BLACK
- PIN
- PLATING TYPE G:1u" Au Min(GOLD FLASH) 3:3u" Au Min F:10u" Au Min
- HEIGHT:70--7.0H
- 0.80 PITCH
- LXWCONN MINI PCI CONNECTOR SERIES

RoHS Compliant 2013/95/EC

修订 SER	修 改 摘 要 REVISION DESCRIPTION	签 名 SIGNATURE	日期 DATE

一般公差 GENERAL TOLERANCE: .X ±0.35; .XX ±0.25; .XXX ±0.10; ANGLES ±1°

版本 (REV): A

LXW connectivity 连兴旺电子(深圳)有限公司 LXWCONN ELECTRONICS(SHENZHEN)CO.,LTD

制图 (DR): Jerry 2020.03.21	品名(TITLE): 0.80MM PITCH MINI PCI EXPRESS H=7.0mm CONNECTOR		
审核 (CHKD):	料号(PART NO): LP3870-*52-B0R		
核准 (APPD): Tong 2020.03.21	比例(SCALE) 1:1	单位(UNITS) mm	张数(SHEET) 1 OF 1	图幅(SIZE) A4