RoHs

VER	MARK	PR. BY	DESCRIPTION	DATE

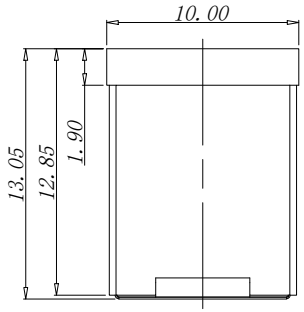

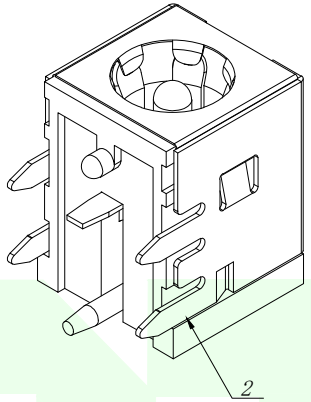

Main technical performance	
Rated electrical load	DC 24V 8A
Contact resistance	≤0.03 Ω
Insulation resistance	≥100MΩ DC250V
Pressure resistance	AC 500V 1min
Insertion force	3-30N
Operating temperature range	-40C° ~+85C°
service life	5000cycles

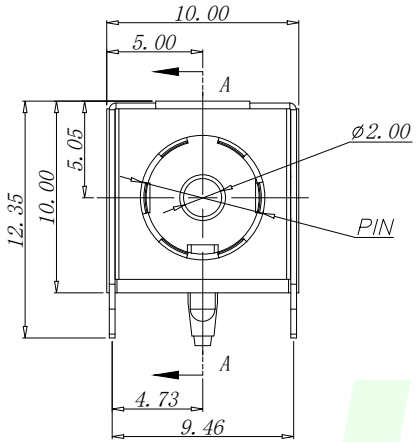

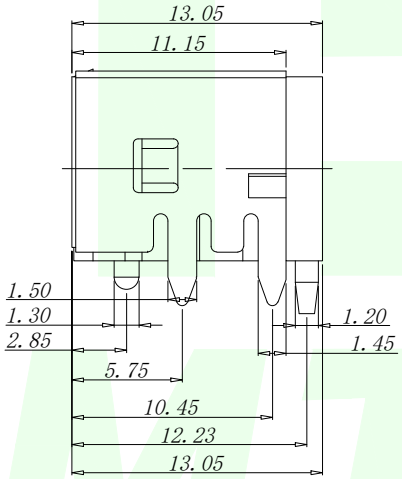

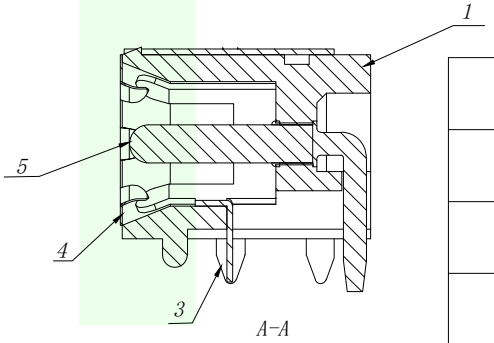

PIN	MODEL
ø1.65	HMT-DC007B-1.65
ø2.00	HMT-DC007B-2.0
ø2.50	HMT-DC007B-2.5

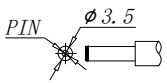

RECOMMEND PULG

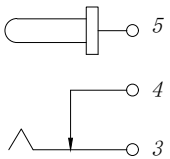

SCHEMATIC

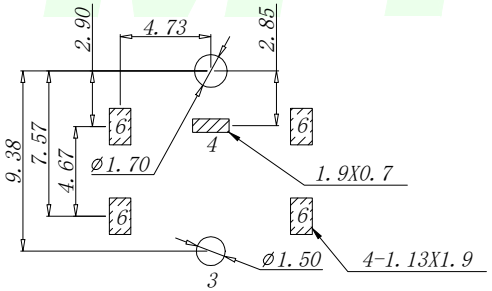

PCB. WELDING DRAWING (TOLERANCE: ±0.05)

序号	名称	数量	材料	备注
5	圆针	1	黄铜棒	镀银
4	盖片	1	H62 黄铜带 (Y)	镀银
3	簧片	1	磷铜带	铜锡
2	屏蔽罩	1	H62 黄铜带 (Y)	黑
1	基座	1	PPA	黑

GENERAL TOLERANCES UNLESS SPECIFIED

X.X	±0.30	X.°	±5°
.XX	±0.20	X.X°	±1°
.XXX	±0.10	X.XX°	±0.5°

MANUFACTURE DWG

HMTCONN 深圳市华明通电子有限公司 Shenzhen Huamingtong Electronics Co., Ltd

PART NO. HMT-DC007B-N

TITLE: 大电流 DC插座

DESIGN: James

CHED: Talen

APPD: Sophia

CUSTOMER	SIZE	UNITS
	A4	MM
	SCALE	SHEET
	N:A	1/1