REV.	DESCRIPTION	ECN NO.	NAME	DATE

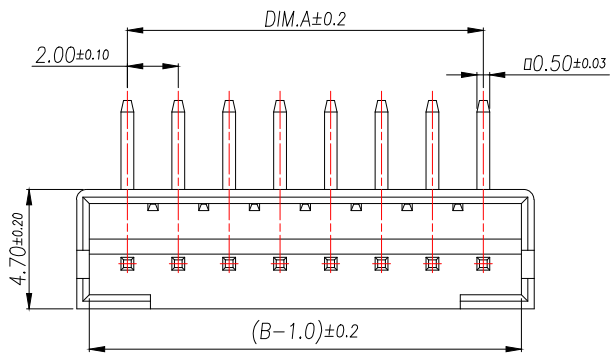

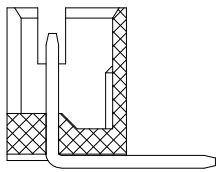

SECTION A−A

PRELIMINARY
DESIGN IS SUBJECT TO CHANGE WITHOUT PRIOR NOTICE

技术要求:

1、塑件材料:PA66 (UL−94V−0)
2、接触件:黄铜镀锡
3、接触电阻:≤10mΩ
4、绝缘电阻:≥1000MΩ
5、额定电压:250V AC DC
6、额定电流:2.0A AC DC
7、耐压:能承受1000V AC/Min ute
8、工作温度:−25°~~+85°
9、可焊性试验:浸锡面积≥95%温度$220^{+5°}_{-0}$,时间 2.5±0.5秒
10、铅和镉等六大有害物质含量要符合环保要求

Part No	PIN	A	B
WF−PH2.0−2PWZ	2	2	6
WF−PH2.0−3PWZ	3	4	8
WF−PH2.0−4PWZ	4	6	10
WF−PH2.0−5PWZ	5	8	12
WF−PH2.0−6PWZ	6	10	14
WF−PH2.0−7PWZ	7	12	16
WF−PH2.0−8PWZ	8	14	18
WF−PH2.0−9PWZ	9	16	20
WF−PH2.0−10PWZ	10	18	22
WF−PH2.0−11PWZ	11	20	24
WF−PH2.0−12PWZ	12	22	26
WF−PH2.0−13PWZ	13	24	28
...	...	...	...
WF−PH2.0−20PWZ	20	(20−1)*2	(20+1)*2

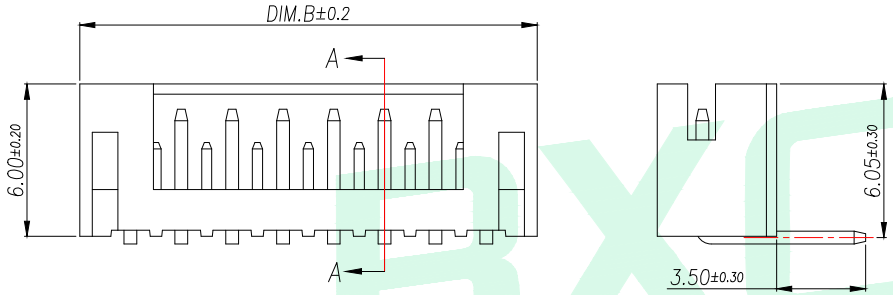

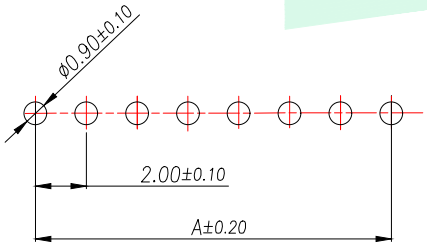

SUGGESTED PCB LAYOUT
(COMPONENT SIDE)

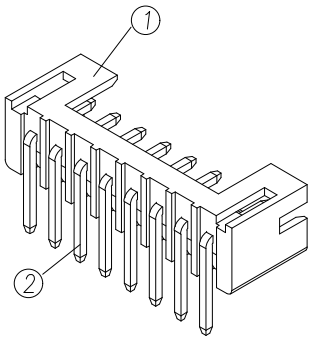

序号	名 称	材 料	数 量	附 注
2	Contact	Brass	n*1	电镀(镍):整个表面镀底镍30u"MIN,再镀锡80u".MIN.
1	Wafer	PA66(UL94V−0)	1	本色

GENERAL TOLERANCE

DIM.	TOL.
X	
X.X	±0.30
X.XX	±0.25
X.XXX	±0.15
GENERAL ANGLE:	±3°

DONGGUAN BAOXUN PRECISION TECHNOLOGY CO., LTD

BXCONN®

TITLE: WAFER 2.0mm H6.0mm 90° DIP

DWG. NO.: WF−PH2.0−XPWZ

DRAWN: MAX

PART NO.: WF−PH2.0−XPWZ

CHECKED: ELLA

UNIT:	SCALE:	SHEET:	DWG. SIZE:	LAYER:
mm	none	1of 1	A4	bxconn

APPROVED: WILL