| REV. | DESCRIPTION | ECN NO. | NAME | DATE |
|---|---|---|---|---|
| | | | | |

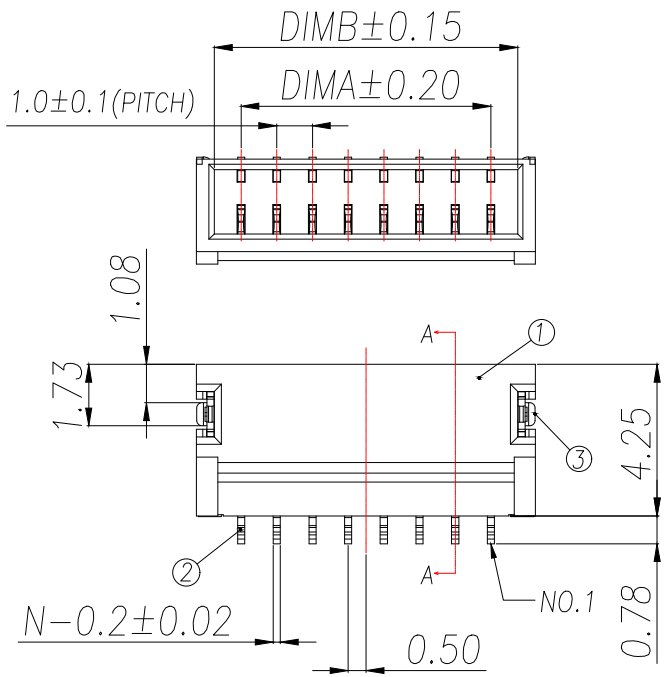


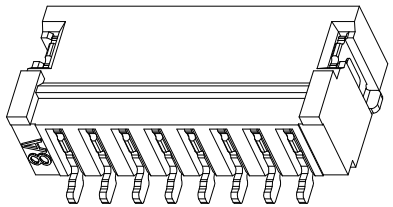

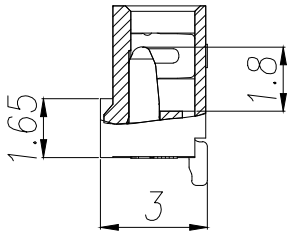


SECTION A-A

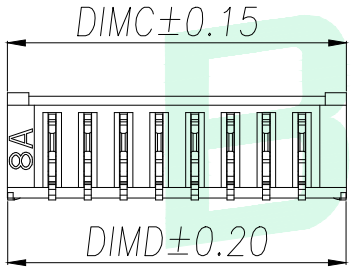


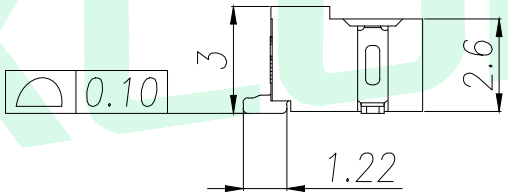


| 序号 | 品名 | 材质 |
|---|---|---|
| 1 | B型卧式WTB胶芯 | PA6T UL94V-0米黄色 |
| 2 | B型卧式WTB端子 | 铜合金/表面镀锡 |
| 3 | B型卧式WTB焊片 | 铜合金/表面镀锡 |

| Part No | CKT | A | B | C | D |
|---|---|---|---|---|---|
| WF-NH1.0-2PF1 | 2 | 1.00 | 2.50 | 3.50 | 3.48 |
| WF-NH1.0-3PF1 | 3 | 2.00 | 3.50 | 4.50 | 4.48 |
| WF-NH1.0-4PF1 | 4 | 3.00 | 4.50 | 5.50 | 5.48 |
| WF-NH1.0-5PF1 | 5 | 4.00 | 5.50 | 6.50 | 6.48 |
| WF-NH1.0-6PF1 | 6 | 5.00 | 6.50 | 7.50 | 7.48 |
| WF-NH1.0-7PF1 | 7 | 6.00 | 7.50 | 8.50 | 8.48 |
| WF-NH1.0-8PF1 | 8 | 7.00 | 8.50 | 9.50 | 9.48 |
| WF-NH1.0-9PF1 | 9 | 8.00 | 9.50 | 10.50 | 10.48 |
| WF-NH1.0-10PF1 | 10 | 9.00 | 10.50 | 11.50 | 11.48 |
| WF-NH1.0-11PF1 | 11 | 10.00 | 11.50 | 12.50 | 12.48 |
| WF-NH1.0-12PF1 | 12 | 11.00 | 12.50 | 13.50 | 13.48 |
| WF-NH1.0-13PF1 | 13 | 12.00 | 13.50 | 14.50 | 14.48 |
| WF-NH1.0-14PF1 | 14 | 13.00 | 14.50 | 15.50 | 15.48 |
| WF-NH1.0-15PF1 | 15 | 14.00 | 15.50 | 16.50 | 16.48 |
| WF-NH1.0-16PF1 | 16 | 15.00 | 16.50 | 17.50 | 17.48 |
| WF-NH1.0-17PF1 | 17 | 16.00 | 17.50 | 18.50 | 18.48 |
| WF-NH1.0-18PF1 | 18 | 17.00 | 18.50 | 19.50 | 19.48 |
| WF-NH1.0-19PF1 | 19 | 18.00 | 19.50 | 20.50 | 20.48 |
| WF-NH1.0-20PF1 | 20 | 19.00 | 20.50 | 21.50 | 21.48 |

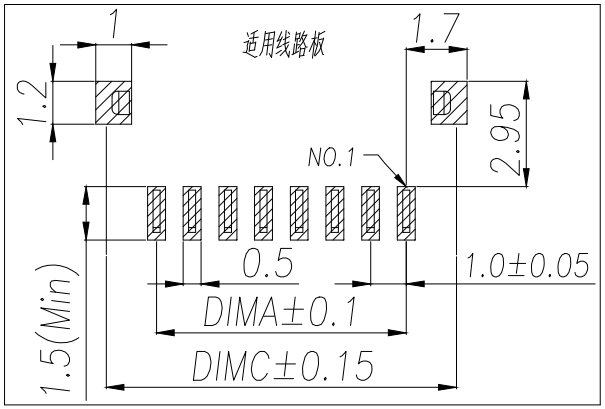


技术指标:

1.塑件表面应光洁、无毛边、无明显收缩、缺陷、裂纹等现象.

2.温度范围:-25°C~85°C.

3.额定电压:50V,AC,DC.

4.接触电阻:≤0.02Ω.

5.绝缘电阻: ≥100MΩ

6.额定电流:1A, AC,DC.

| GENERAL TOLERANCE | DONGGUAN BAOXUN PRECISION TECHNOLOGY CO., LTD | | | | BXCONN® |
|---|---|---|---|---|---|
| DIM. TOL. x. ±0.50 x.x ±0.20 x.xx ±0.10 GENERAL ANGLE: x.° ±1° | TITLE: 1.0 Pitch B型卧式WTB | | | | |
| | DWG. NO.: WF-NH1.0-XPF1 | | | CHECKED: MAX | |
| | PART NO.: WF-NH1.0-XPF1 | | | DRAWN: ELLA | |
| | UNIT: mm | SCALE: none | SHEET: 1of 1 | DWG. SIZE: A4 | LAYER: bxconn | APPROVED: WILL |