REV.	DESCRIPTION	ECN NO.	NAME	DATE

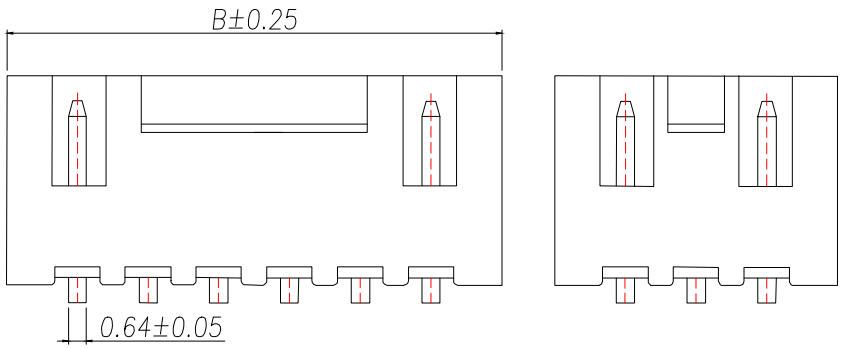

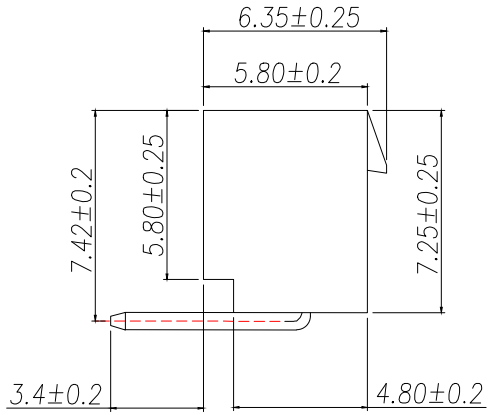

Part No	Pin	A	B
WF-HA2.54-2PWZ	2	2.50	7.50
WF-HA2.54-3PWZ	3	5.00	10.00
WF-HA2.54-4PWZ	4	7.50	12.50
WF-HA2.54-5PWZ	5	10.00	15.00
WF-HA2.54-6PWZ	6	12.50	17.50
WF-HA2.54-7PWZ	7	15.00	20.00
WF-HA2.54-8PWZ	8	17.50	22.50
WF-HA2.54-9PWZ	9	20.00	25.00
WF-HA2.54-10PWZ	10	22.50	27.50
WF-HA2.54-11PWZ	11	25.00	30.00
WF-HA2.54-12PWZ	12	27.50	32.50
WF-HA2.54-13PWZ	13	30.00	35.00
WF-HA2.54-14PWZ	14	32.50	37.50
WF-HA2.54-15PWZ	15	35.00	40.00
WF-HA2.54-16PWZ	16	37.50	42.50
WF-HA2.54-17PWZ	17	40.00	45.00
WF-HA2.54-18PWZ	18	42.50	47.50
WF-HA2.54-19PWZ	19	45.00	50.00
WF-HA2.54-20PWZ	20	47.50	52.50

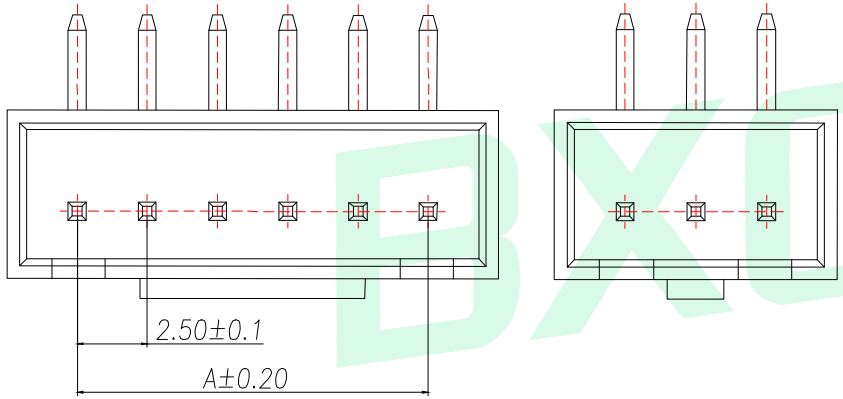

技术要求:

1.塑件材料:PA66(UL-94V-0)
2.接触件:黄铜镀锡
3.接触电阻:≤10mΩ
4.绝缘电阻:≥100MΩ
5.额定电压:250V AC DC
6.额定电流:2.0A AC DC
7.耐压:能承受1000V AC/Minute
8.工作温度:-25°~+85°
9.可焊性试验:浸锡面积≥95%温度235 ,时间2.5±0.5秒
10.铅和镉等六大有害物质含量要符合环保要求.

BXCONN

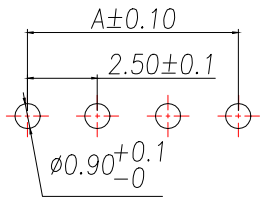

SUGGESTED PCB LAYOUT
(COMPONENT SIDE)

序号	名 称	材 料	数 量	附 注
2	Contact	Brass	n*1	电镀(镍):整个表面镀底镍30u"MIN,再镀镍80u".MIN.
1	Wafer	PA66(UL94V-0)	1	白色

GENERAL TOLERANCE

DIM.	TOL.
X	
X.X	±0.30
X.XX	±0.25
X.XXX	±0.15
GENERAL ANGLE:	±3°

DONGGUAN BAOXUN PRECISION TECHNOLOGY CO., LTD

BXCONN®

TITLE: WAFER XHB2.54MM 带扣 弯针

DWG. NO.: WF-HA2.54-XPWZ

DRAWN: MAX

PART NO.: WF-HA2.54-XPWZ

CHECKED: ELLA

UNIT:	SCALE:	SHEET:	DWG. SIZE:	LAYER:	APPROVED:
mm	none	1of 1	A4	bxconn	WILL