REV.	MATTER	APP.	DATE
A			

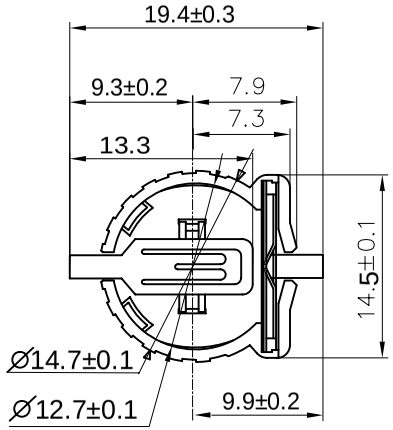

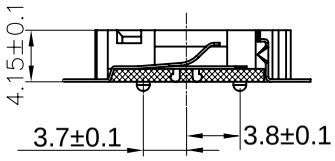

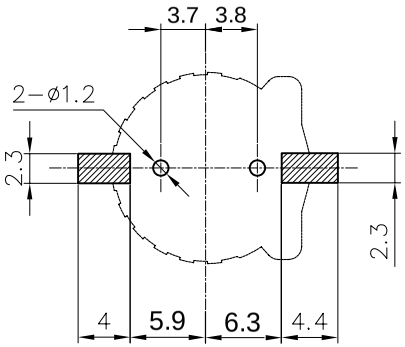

PCB Holes Diagram

xqc; Top View

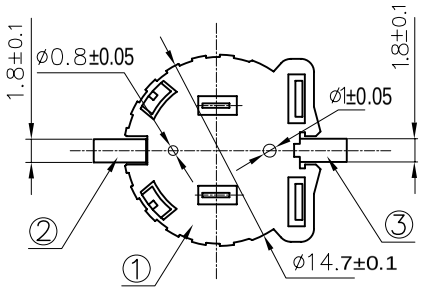

NOTE:

1.MATERIAL:

a.HOUSING:THERMOPLASTIC GLASS FIBRE UL94V−0

b.CONTACT:PHOSPHOR BRONZE

(SURFACE PLATING:A*u")

SEE ORDERING INFORMATION

2.ELECTRIC:

a.CONTACT RESISTANCE: 30 MILLIOHMS MAX

b.INSULATION RESISTANCE: 1000 MEGA OHMS MIN

c.DIELECTNIC VOLTAGE: 750V AC ONE SEC LEVEL

d.OPERATING TEMPERATURE: −55°C~ +85°C

ORDERING INFORMATION

BS-12-A**0*002

- BS: 电池座系列
- 12: BS-12系列
- A: SMT 180° TYPE
- 0: CRUST: 0−WITHOUT
- 002: PLATING: J−Au 0.6-0.8U" / K−Au30U"

1A-PBT WHITE
1B-PBT BLACK
2A-PPS BROWN
2B-PPS WHITE
2C-PPS BLACK
3A-PPA WHITE
3B-PPA BROWN

TOLERANCE

LINEAR		ANGLE	
x.	±1	x.°	±5°
.x	±0.38	.x°	±2°
.xx	±0.25	.xx°	±1°
.xxx	±0.10		

NO.	PART NAME	MATERIAL	COLOR/FINISHED
3	TERMINAL−2	PHOSPHOR BRONZE	Au−Plated
2	TERMINAL−1	PHOSPHOR BRONZE	Au−Plated
1	HOUSING	PPS	BROWN

日期DATE	单位UNITS	审核CHECK
2009.1.28	mm	
比例SCALE	制图 DRAW	设计DESIGN
1/1		

BATTERY HDLDER

PART NO. BS−12−A2A0J002

TITLE:

两PIN电池座卧式SMT（BS-1220-2）