RoHS Compliant

ZONE	E C N . N O .	DESCRIPTION	DRAWING	DATE
A		INITIAL	林生财	2023.06.19

NOTE:
1.MATERIAL:
1.1 INSULATOR: HIGH TEMPERATURE PLASTIC UL 94 V-0;
1.2 CONTACT: COPPER ALLOY
1.3 SHELL:STAINLESS STEEL
2.ELECTRICAL CHARACTERISTICS;
2.1 CONTACT RESISTANCE: 40mΩ Max FOR INITIAL. 10mΩ CHANGE AFTER TEST. MEASURE AT 20mV, 100mA.
2.2 CONTACT CURRENT RATING: 5A FOR VBUS PIN; 1.25A FOR VCONN PIN.
2.3 DIELECTRIC WITHSTANDING VOLTAGE: 100V AC R.M.S.
2.4 INSULATION RESISTANCE 100MΩ Min
2.5 OPERATING TEMPERATURE: -25°C ~ 85°C
3 MECHANICAL CHARACTERISTICS:
3.1 MATING FORCE: 5~20 N.
3.2 UNMATED FORCE: 8~20N AFTER TEST
3.3 DURABILITY: 10,000 CYCLES
4.PLATING
4.1 TERMINAL CONTACT: (SEE TAB) GOLD PLATING 1u" ALL OVER 50u" Min NICKEL AND 80u"Min Tin ALL OVER 50u" Min NICKEL ON SOLDER AREA
4.2 SHELL: 30u" Min. NICKEL ALL OVER,

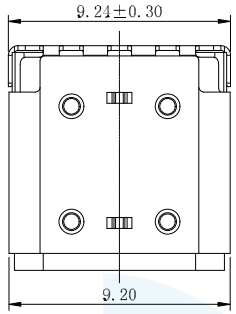

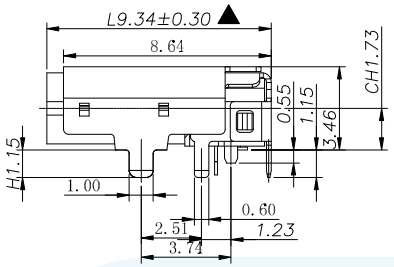

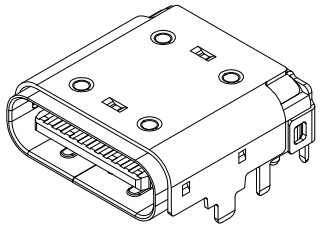

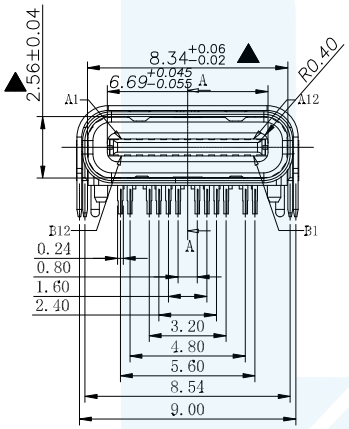

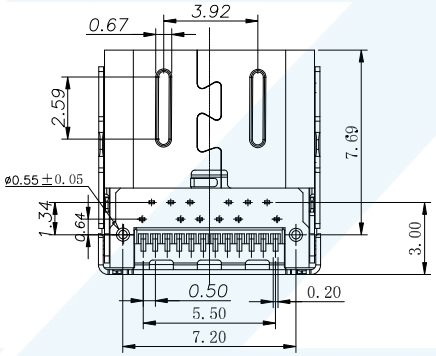

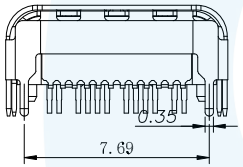

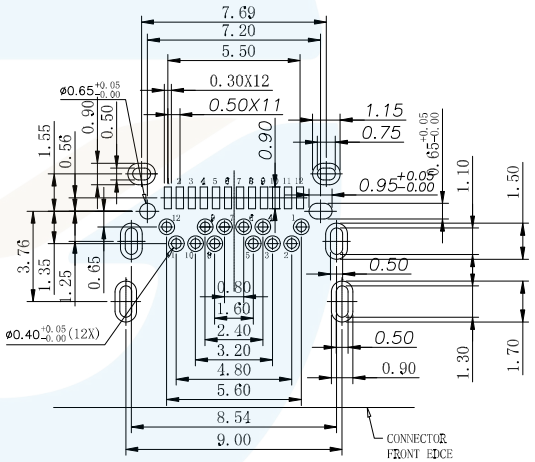

RECOMMEND P.C.B LAYOUT(T=1.00mm)
TOLERANCE UNSPECIFIED ±0.05mm

USB TYPE-C PIN ASSIGNMENTS

PIN NUMBER	SIGNAL NAME	PIN NUMBER	SIGNAL NAME
A1	GND	B12	GND
A2	SSTXp1	B11	SSRXp1
A3	SSTXn1	B10	SSRXn1
A4	VBUS	B9	VBUS
A5	CC1	B8	SBU2
A6	Dp1	B7	Dn2
A7	Dn1	B6	Dp2
A8	SBU1	B5	CC2
A9	VBUS	B4	VBUS
A10	SSRXn2	B3	SSTXn2
A11	SSRXp2	B2	SSTXp2
A12	GND	B1	GND

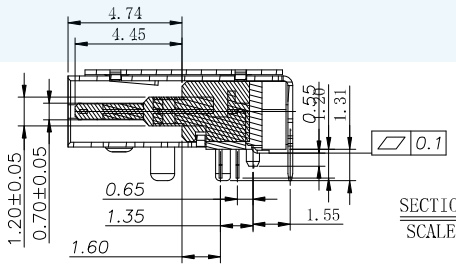

SECTION A-A
SCALE 1:1

Item	Title	Material	Dispose	Q'TY
1	Shell	SUS304	Ni:30u" Min.	1PCS
2	GND Plate	SUS301		2PCS
3	Mid Plate	SUS301		1PCS
4	Contact	C7025	Mating Area: Au 1u" Solder Tails: Matt Tin	2PCS
5	InsertMolding	LCP	UL 94V-0 Black	1PCS
6	COVER	LCP	UL 94V-0 Black	1PCS

LZG INDUSTRIAL CO. LTD

DRAWING:	林生财	DATE:	2023.06.19	SCALE	1:1
CHECK:	李宏鑫	DATE:	2023.06.19	MATERIAL	*
APPROVAL:	杨进宝	DATE:	2023.06.19	DWG. NO.	
DRAWING NO.	ZB50062-24DBAP-A			SHEET	1/1

PART NAME	USB Type C 24PIN母座 前插后贴带上盖L=9.34	TOLERANCE UNLESS OTHERWISE SPECIFIED:	0.0±0.3 0.00±0.2 0.000±0.1	0.°±2° 0.0°±1° 0.00°±0.5°	UNIT: mm
PART NO.	ZB50062-24DBAP-A				