SOP-8 Plastic-Encapsulate MOSFETS

Features

- V_{DS}=-30V
- I_D=-5.1A
- $R_{DS(on)}$@V_{GS}=-10V < 55mΩ
- $R_{DS(on)}$@V_{GS}=-4.5V < 90mΩ
- Low Gate Charge and Rdson
- Fast Switching Speedze
- Improved dv/dt capability, high ruggedness

Drain-source Voltage
-30 V
Drain Current
-5.1 Ampere

Applications

- Load Switch
- PWM applications
- Power management

SOP-8

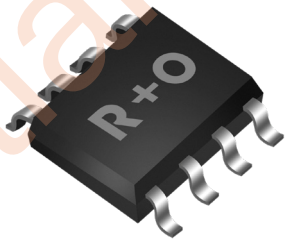

Mechanical Data

- Case: SOP-8
  Molding compound meets UL 94V-0 flammability rating, RoHS-compliant,halogen-free
- Terminals: Solder plated, solderable per MIL-STD-750,Method 2026

Function Diagram

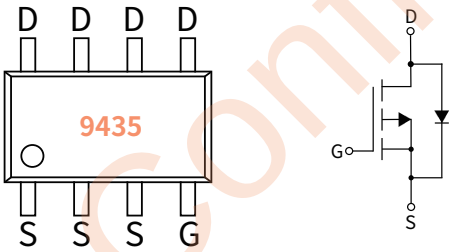

Ordering Information

PACKAGE	PACKAGE CODE	UNIT WEIGHT(g)	REEL(pcs)	BOX(pcs)	CARTON(pcs)	DELIVERY MODE
SOP-8	R3	0.077	4000	12000	48000	13''

Maximum Ratings (Ta=25°C Unless otherwise specified)

PARAMETER	SYMBOL	UNIT	VALUE
Drain-source Voltage	V_{DS}	V	-30
Gate-source Voltage	V_{GS}	V	±20
Drain Current	I_D	A	-5.1
Pulsed Drain Current [1]	I_{DM}	A	-20.4
Total Power Dissipation	P_D	W	2.15
Junction temperature	T_J	°C	-55 ~+150
Storage temperature	T_{stg}	°C	-55 ~+150
Thermal Resistance Junction-to-Ambient	$R_{\theta JA}$	°C / W	58

HJC Confidential

Static Parameter Characteristics (Tj=25°C Unless otherwise specified)

PARAMETER	SYMBOL	Condition	UNIT	Min	Typ	Max
Drain-Source Breakdown Voltage	BV_{DSS}	V_{GS}= 0V, I_D=-250μA	V	-30	—	—
Zero Gate Voltage Drain Current	I_{DSS}	V_{DS}=-30V, V_{GS}=0V	μA	—	—	-1.0
Gate-Body Leakage Current	I_{GSS}	V_{GS}= ±20V, V_{DS}=0V	nA	—	—	±100
Gate Threshold Voltage	$V_{GS(th)}$	V_{DS}= V_{GS}, I_D=-250μA	V	-1.0	-1.5	-2.5
Static Drain-Source On-Resistance (2)	$R_{DS(ON)}$	V_{GS}= -10V, I_D=-5.1A	mΩ	—	43	55
		V_{GS}= -4.5V, I_D=-4.2A		—	65	90

Dynamic Parameters

PARAMETER	SYMBOL	Condition	UNIT	Min	Typ	Max
Input Capacitance	C_{iss}	V_{DS}=-15V, V_{GS}=0V, f=1MHZ	pF	—	596	—
Output Capacitance	C_{oss}			—	95	—
Reverse Transfer Capacitance	C_{rss}			—	68	—

Switching Parameters

PARAMETER	SYMBOL	Condition	UNIT	Min	Typ	Max
Turn-on Delay Time	$t_{D(on)}$	V_{GS}=-10V, V_{DD}=-15V, I_D=-1A ,R_{GEN}=2.5Ω	nS	—	14	—
Turn-on Rise Time	t_r		nS	—	61	—
Turn-off Delay Time	$t_{D(off)}$		nS	—	19	—
Turn-off fall Time	t_f		nS	—	10	—
Total Gate Charge	Q_g	V_{DS}=-15V, I_D=-5.1A V_{GS}=-10V	nC	—	6.8	—
Gate-Source Charge	Q_{gs}		nC	—	1	—
Gate-Drain Charge	Q_{gd}		nC	—	1.4	—

Drian-Source Diode Characteristics

PARAMETER	SYMBOL	Condition	UNIT	Min	Typ	Max
Diode Forward Voltage	V_{SD}	I_S=-5.1A, V_{GS}=0V	V	—	—	-1.2
Maximum Body-Diode Continuous Current	I_S	—	A	—	—	-5.1

Note :
(1)Repetitive Rating: Pulse width limited by maximum junction temperature.
(2)EAS condition : Tj=25°C ,VDD=-15V,VG=-10V,L=0.5mH,IAS=-7.7A,Rg=25Ω.
(3)Pulse Test: Pulse Width ≤ 300μs, Duty Cycle ≤ 2%.

HJC Confidential

Ratings And Characteristics Curves (Ta=25°C Unless otherwise specified)

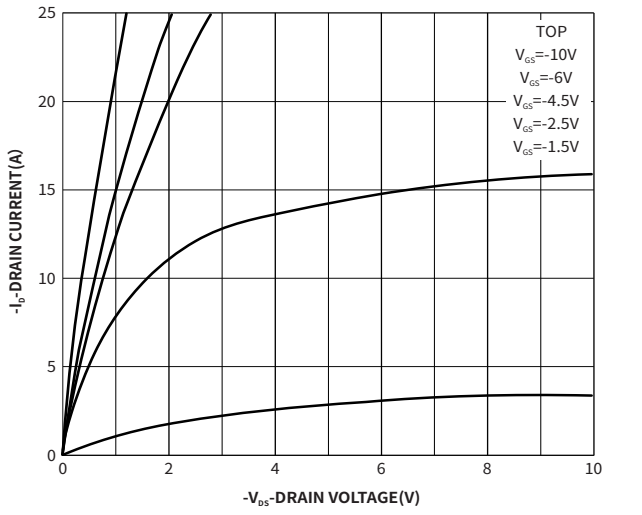

Fig.1 Output Characteristics

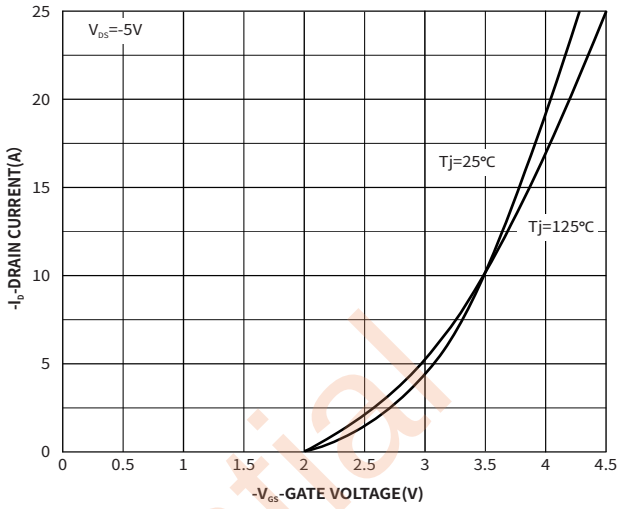

Fig.2 Transfer Characteristics

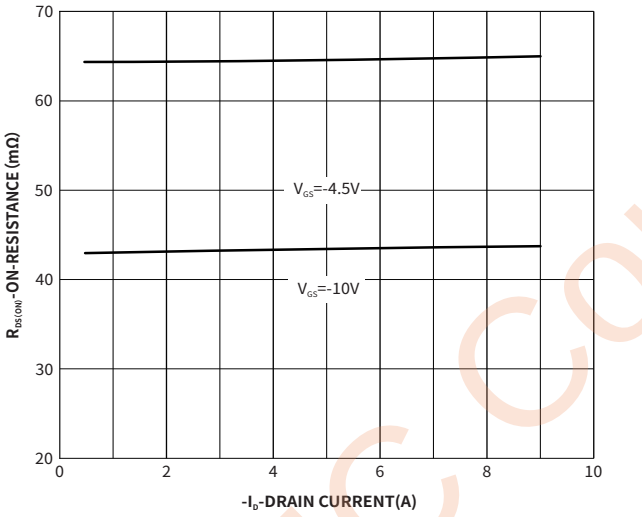

Fig.3 On-Resistance vs. Drain Current and Gate Voltage

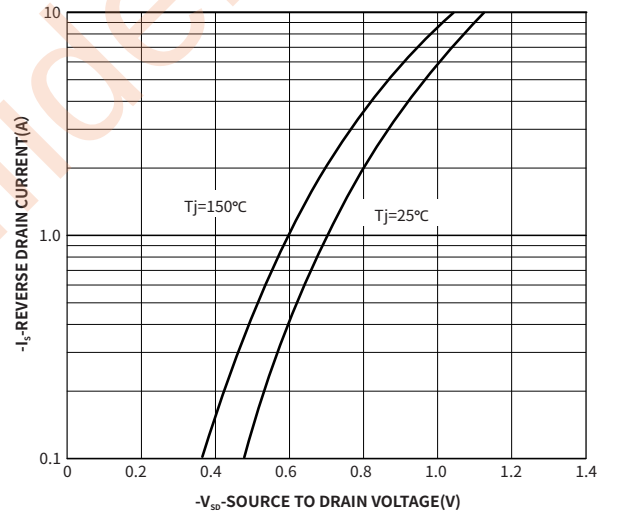

Fig.4 Typical Body-Diode Forward Characteristics

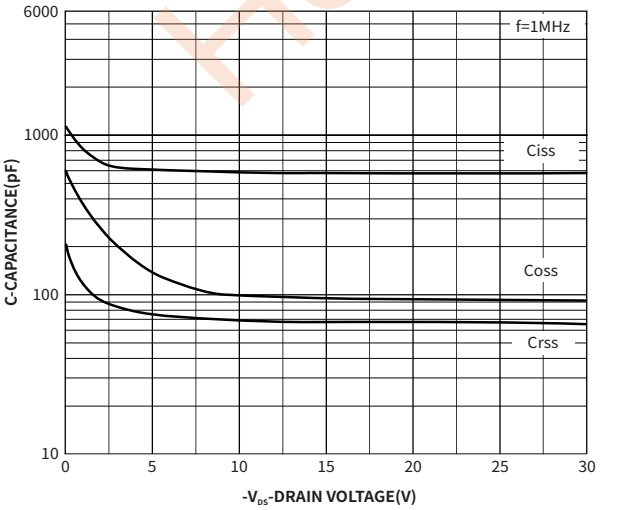

Fig.5 Capacitance Characteristics

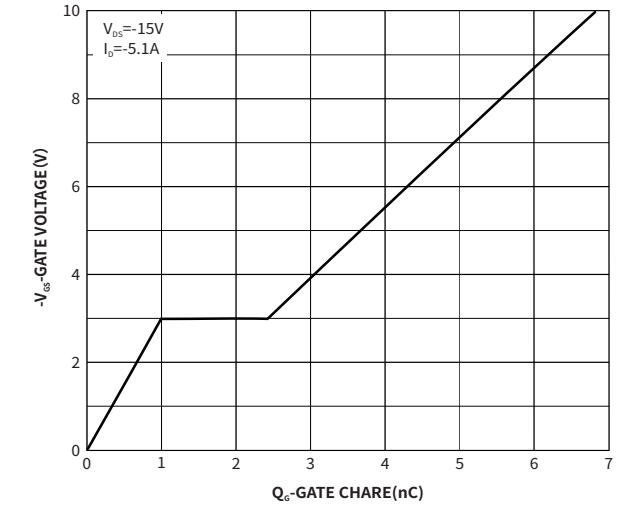

Fig.6 Gate Charge

HJC Confidential

Ratings And Characteristics Curves (Ta=25°C Unless otherwise specified)

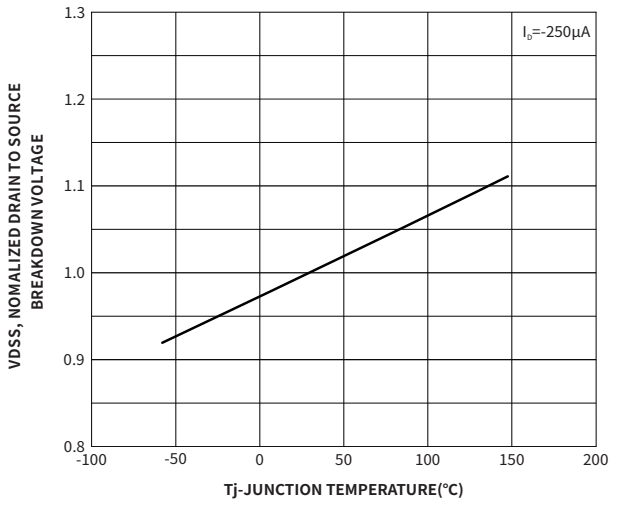

Fig.7 V(BR)DSS vs.Junction Temperature

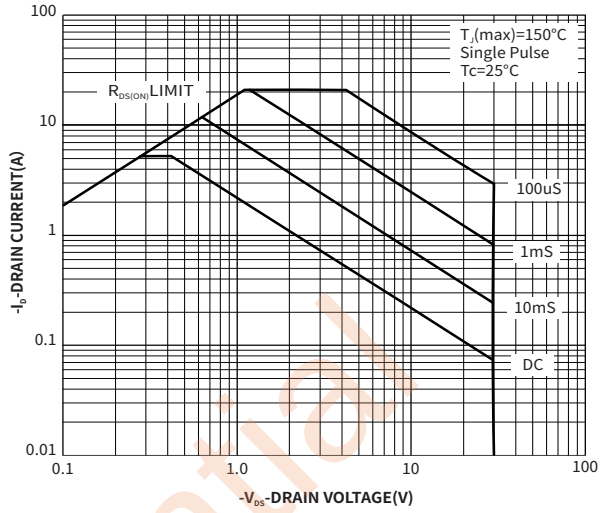

Fig.8 Safe Operation Area

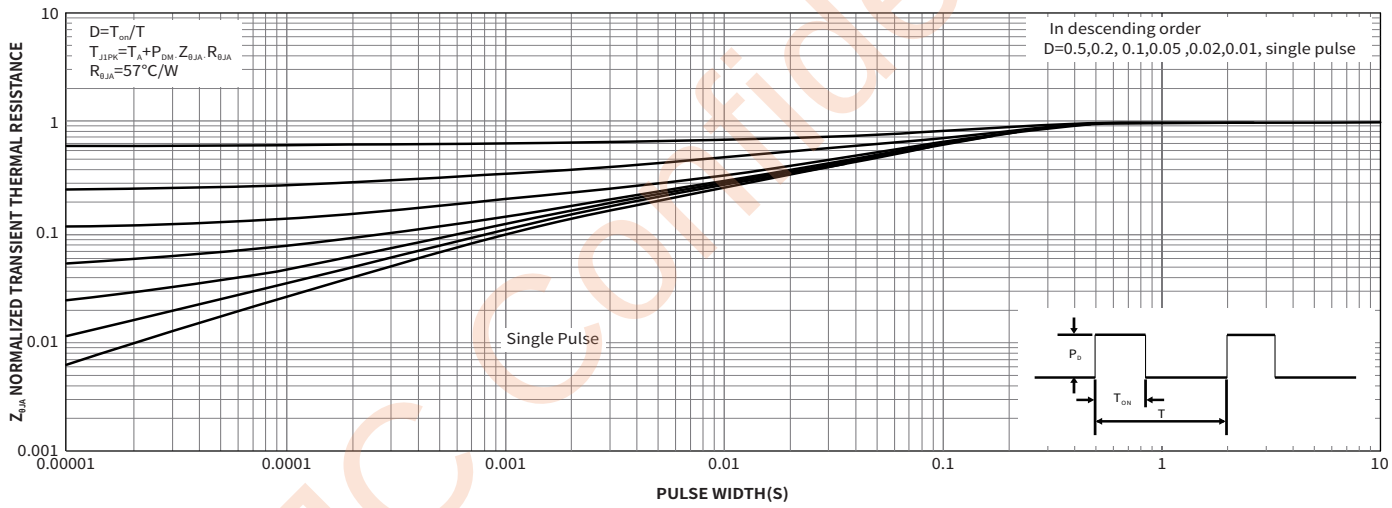

Fig.9 Normalized Maximum Transient Thermal Impedance

HJC Confidential

Package Outline Dimensions (SOP-8)

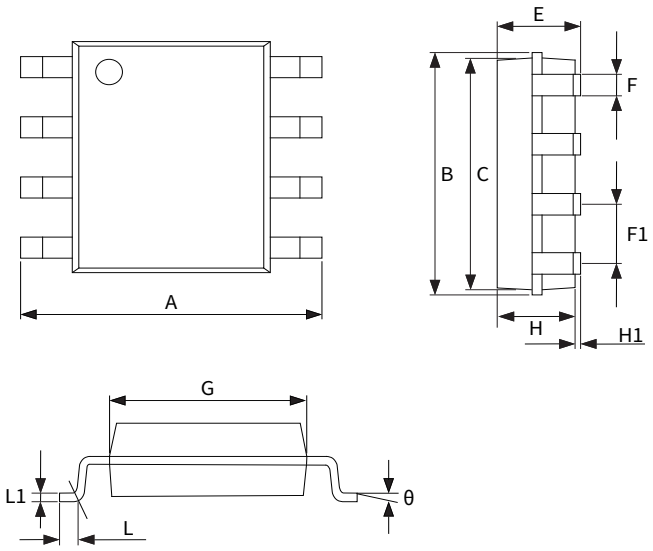

Symbol	Dimensions			
	Millimeters		Inches	
	Min.	Max.	Min.	Max.
A	5.70	6.30	0.224	0.248
B	5.13MAX.		0.202MAX.	
C	4.72	5.12	0.186	0.201
E	1.80MAX.		0.071MAX.	
F	0.31	0.51	0.0122	0.020
F1	1.27TYP.		0.050TYP.	
G	3.75	4.15	0.148	0.163
H	1.35	1.65	0.053	0.065
H1	0.1	0.25	0.004	0.010
L	0.3	0.7	0.012	0.028
L1	0.21TYP.		0.008TYP.	
θ	-	8°	-	8°

Suggested Pad Layout

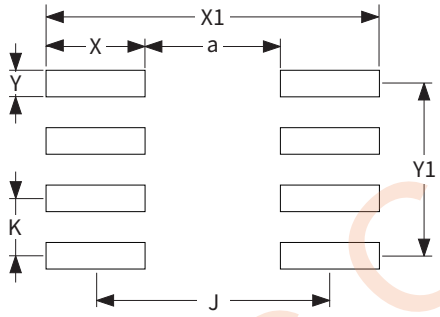

Symbol	Dimensions			
	Millimeters		Inches	
	Min.	Max.	Min.	Max.
a	2.90	3.10	0.114	0.122
J	5.10	5.30	0.201	0.209
K	1.17	1.37	0.046	0.054
X	2.10	2.30	0.083	0.091
X1	7.30	7.50	0.287	0.295
Y	0.50	0.70	0.020	0.028
Y1	3.71	3.91	0.146	0.154

HJC Confidential

1.Gate Charge Test Circuit & Waveforms

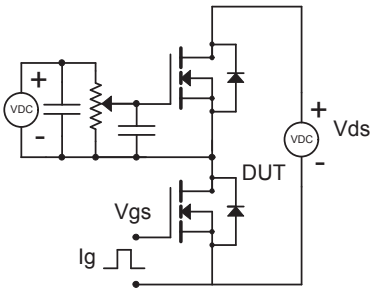

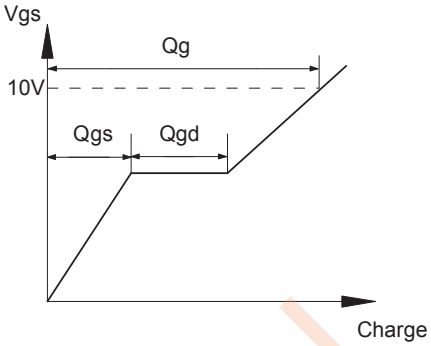

2. Resistive Switching Test Circuit & Waveforms

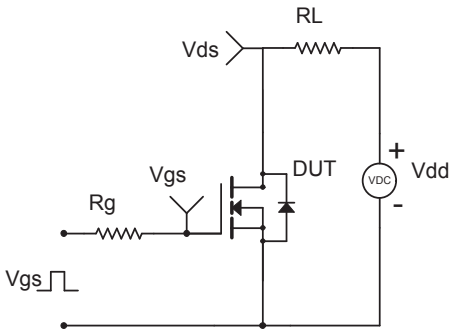

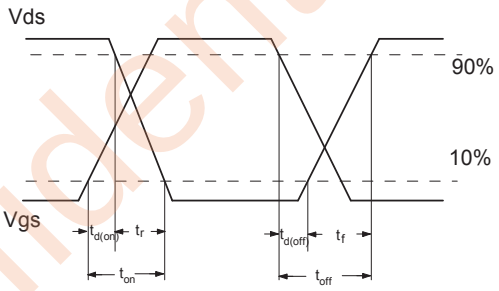

3.Unclamped Inductive Switching (UIS) Test Circuit & Waveforms

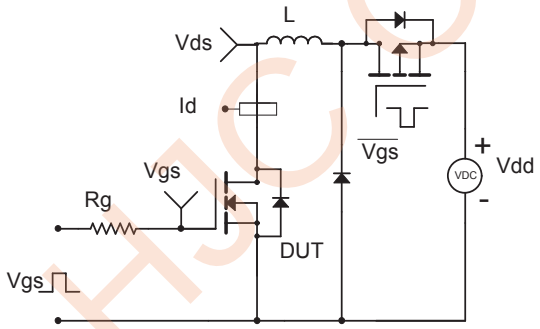

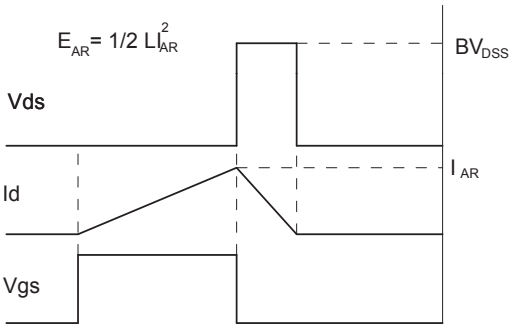

4.Diode Recovery Test Circuit & Waveforms

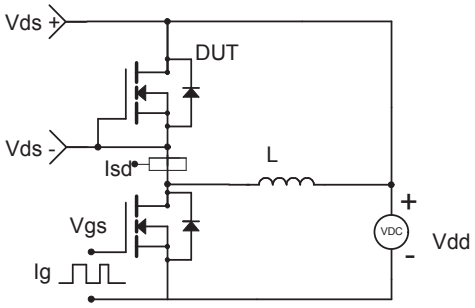

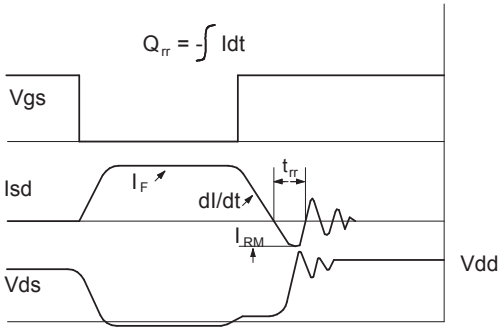

HJC confidential