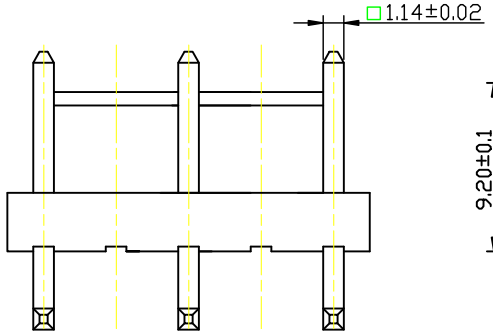

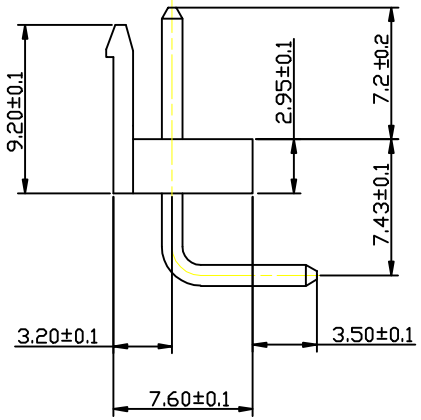

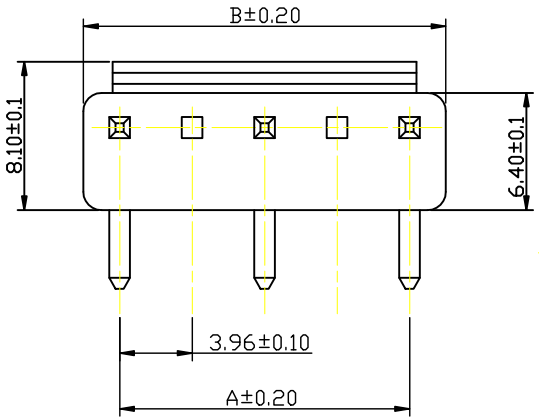

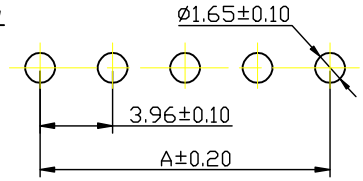

SUGGESTED PCB LAYOUT
(COMPONENT SIDE)

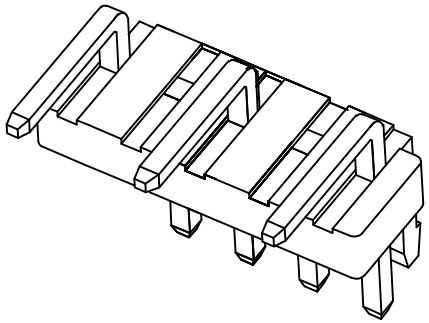

SPECIFICATION

1 Material:
  Insulator: PA66 (UL94V-0)
  Contacts: Brass,Tin-plated
2 Contact resistance: ≤10mΩ
3 Insulation resistance: ≥1000MΩ
4 Rated voltage: 250 V AC DC
5 Rated current: 10 A AC DC
6 Withstand Voltage: 1500V AC/minute
7 Temperature Range: -25℃～ +85℃
8 Six deleterious substance content meet the environmental protection requirement

型号-线数 TYPE-Poles	尺寸Dimensions(mm) A	B	型号-线数 TYPE-Poles	尺寸Dimensions(mm) A	B
VH-2AGW	3.96	8.00	VH-8AGW	27.72	31.76
VH-3AGW	7.92	11.96	VH-9AGW	31.68	35.72
VH-4AGW	11.88	15.92	VH-10AGW	35.64	39.68
VH-5AGW	15.84	19.88	VH-11AGW	39.60	43.64
VH-6AGW	19.80	23.84	VH-12AGW	43.56	47.60
VH-7AGW	23.76	27.80	VH-13AGW	47.52	51.80

REV	DESCRIPTION	REV. DRAWN	DATE
A	NEW RELEASE		

TOLERANCE	
.	±0.25
*.**	±0.15
*.***	±0.05
SCALE:	
UNIT:	mm
VIEW:	◎ ▷
DRAW	
CHECK	
APPRO	
VH-NA高弯	
TITLE:	3.96mm PITCH 90° WAFER
PART NO:	VH高弯