RoHS Compliant

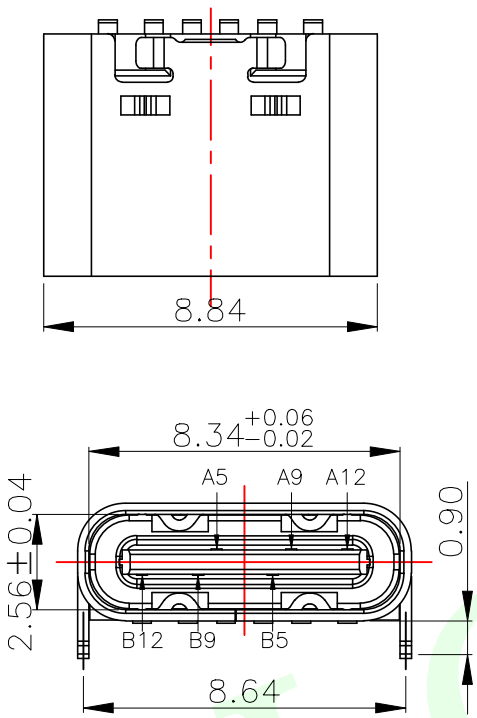

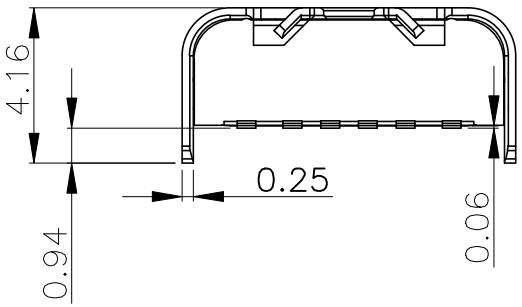

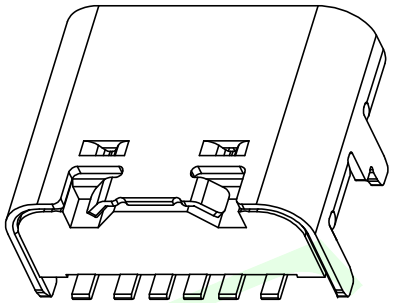

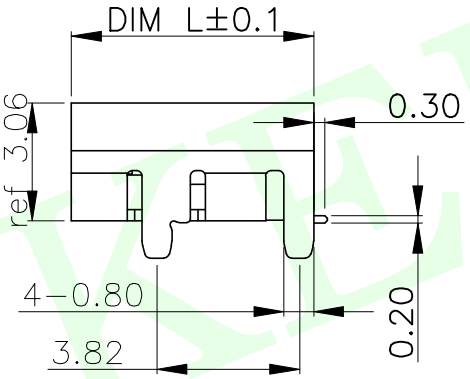

USB TYPE-C PIN ASSIGNMENTS

PIN NUMBER	SIGNAL NAME
A5	CC1
A9	VBUS
A12	GND
B12	GND
B9	VBUS
B5	CC2

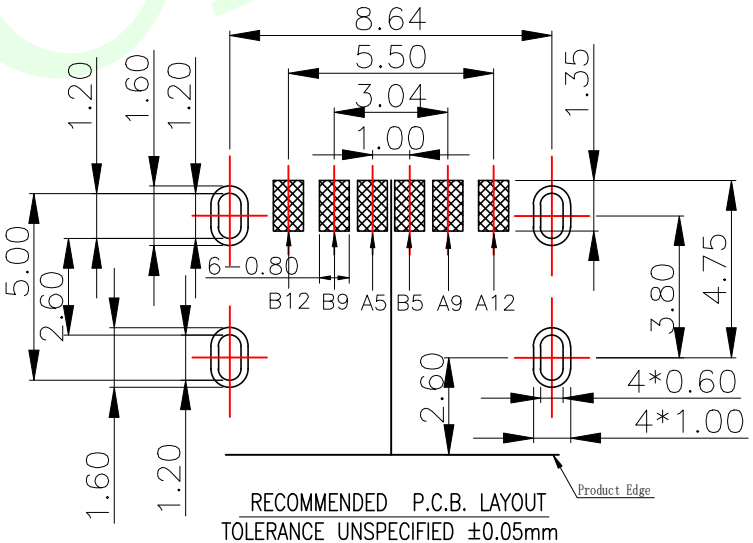

RECOMMENDED P.C.B. LAYOUT
TOLERANCE UNSPECIFIED ±0.05mm

NOTE:
1.MATERIAL SPECIFICATION:
1.HOUSING:HIGH TEMPERATURE RESISTANT PLASTIC,UL94 V-0.
2.CONTACTS:COPPER ALLOY
3.MID PLATE: STAINLESS STEEL
4.FRONT SHELL: STAINLESS STEEL
2.PLATING SPECIFICATION:
2-1.CONTACTS:
Ni 30u" MIN. UNDER PLATED OVER ALL.
Au PLATED ON THE FUNCTIONAL AREA OF CONTACT.
(GOLD PLATING THICKNESS FOLLOW THE P/N)
PLATING SPECIFICATIONS OF THE SOLDER AREA FOLLOW THE P/N
2-2.FRONT SHELL:
SEE TABLE1.
2-3.SHIELD PLATE&EMI PLATE:
CLEAR ONLY
3.MECHANICAL PERFORMANCE,
3-1.INSERTION FORCE: 0.5~2.0kgf.
3-2.REMOVAL FORCE: 0.8kgf~2.0kgf.
3-3.DURABILITY: 5000 CYCLES.
4.ELECTRICAL PERFORMANCE,
4-1. CURRENT RATING:3.0A
VOLTAGE RATING:5.0V
4-2. LLCR:
VBUS & GND PINS AND OTHER PINS: 40mΩ/PIN MAX.
SHIELD: 50mΩ/MAX.
LLCR MAX. CHANGE OF ALL PINS: 10mΩ.
4-3.INSULATION RESISTANCE: 100MΩ MIN
4-4.DIELECTRIC WITHSTAND VOLTAGE,AC 100V FOR 1 MINUTE.
5. ENVIRONMENTAL PERFORMANCE:
OPERATING TEMPERATURE: -25°C~+85°C.
6.IR REFLOW:
THE PEAK TEMPERATURE ON THE BOARD SHALL
BE MAINTAINED FOR 10 SECONDS AT 260°C.

成品料号	DIM L
LCK-TCF302B-L65WL-G1	6.50
LCK-TCF302B-L68WL-G1	6.80
LCK-TCF302B-L735WL-G1	7.35

LCK-TCF 302B-LXXX W L- G1

连晟欣 LCK
产品类别
TCF:TYPE C母头
TCM:TYPE C公头
产品流水料号识别码
高度
L65:6.5
L68:6.8
有柱无柱
Y: 有柱
W: 无柱
包装方式
L:圆盘
B:吸塑盒
T:管装
电镀规格
G1: 1U
G3: 3U
(以此推类)

MEASURE POINT:
QUADRANT POINT QP
TANGERCY POINT TP
INTERSECTION POINT IP

UNLESS OTHERWISE SPECIFIED,TOLERANCE:
X. ±0.25
X.x ±0.20
X.xx ±0.15
ANGULAR ±3°

联晟欣连接器（深圳）有限公司
Lianshengxin Connector (Shenzhen) Co., Ltd

DESIGN	Andy	DATE	2014.12.24
CHECKED		DATE	
APPROVED		DATE	

TITLE: USB TYPE C 6PIN 四脚插板脚长0.9 H6.5&6.8&7.35

PART NO: LCK-TCF302-LXXWL-G1 | REV: 04 | SCALE: 1:1 | UNIT: mm
DRAWING NO: 1020221301 | SIZE: A4 | SHEET: 1/1

LCKELEC