REV.	ECN NO.	DESCRIPTION	APP.	DATE
A				

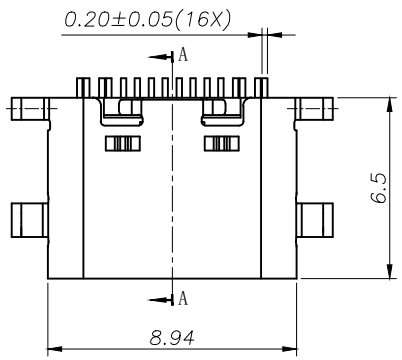

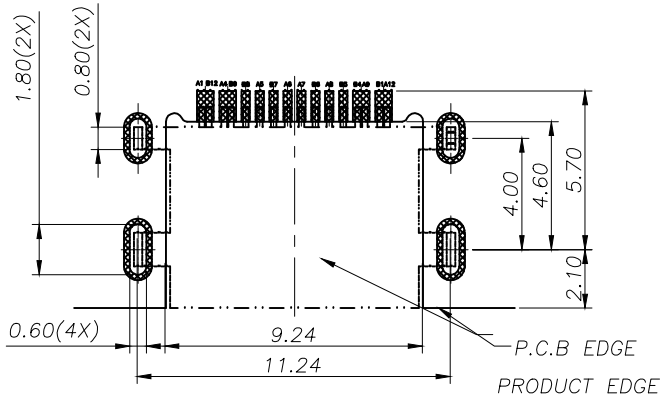

RECOMMENDED PCB LAYOUT(TOP VIEW)
THICKNESS 0.80MM;DEFAULT TOLERANCE:±0.05

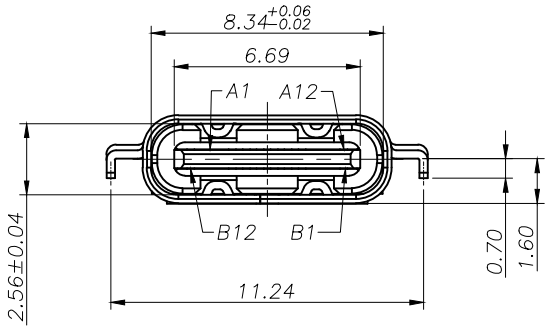

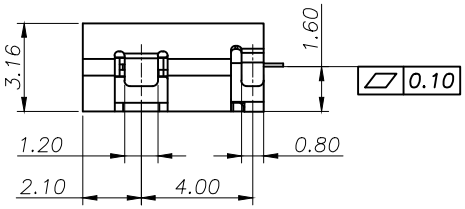

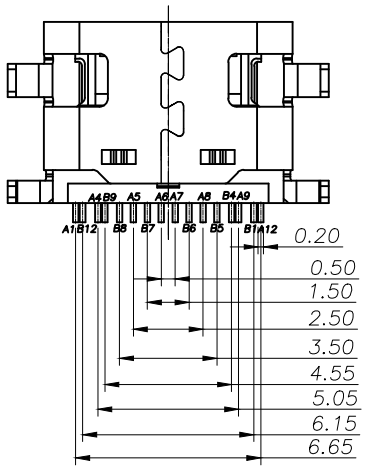

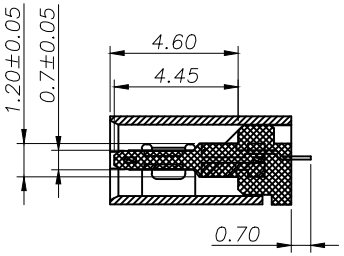

SECTION:A−A

NOTE:

1.MATERIAL SPECIFICATION:
  1.HOUSING:HIGH TEMPERATURE RESISTANT PLASTIC,UL94 V−0.
  2.CONTACTS:COPPER ALLOY
  3.MID PLATE: STAINLESS STEEL
  4.FRONT SHELL: STAINLESS STEEL

2.PLATING SPECIFICATION:
  2−1.CONTACTS:
  Ni 50u" MIN. UNDER PLATED OVER ALL.
  Au PLATED ON THE FUNCTIONAL AREA OF CONTACT.
  (GOLD PLATING THICKNESS FOLLOW THE P/N)
  PLATING SPECIFICATIONS OF THE SOLDER AREA FOLLOW THE P/N
  2−2.FRONT SHELL:
  Ni 30u" MIN. UNDER PLATED OVER ALL.
  2−3.MID PLATE:
  CLEAR ONLY

3.MECHANICAL PERFORMANCE,
  3−1.INSERTION FORCE: 0.5~1.5kgf.
  3−2.REMOVAL FORCE: 0.8kgf~1.5kgf.
  3−3.DURABILITY: 5000 CYCLES.

4.ELECTRICAL PERFORMANCE,
  4−1. CURRENT RATING:3.0A
  VOLTAGE RATING:5.0V
  4−2. LLCR:
  VBUS & GND PINS AND OTHER PINS: 40mΩ/PIN MAX.
  SHIELD: 50mΩ/MAX.
  LLCR MAX. CHANGE OF ALL PINS: 10mΩ.
  4−3.INSULATION RESISTANCE: 100MΩ MIN
  4−4.DIELECTRIC WITHSTAND VOLTAGE,AC 100V FOR 1 MINUTE.

5. ENVIRONMENTAL PERFORMANCE:
  OPERATING TEMPERATURE: −25°C~+85°C.

6.IR REFLOW:
  THE PEAK TEMPERATURE ON THE BOARD SHALL
  BE MAINTAINED FOR 10 SECONDS AT 260°C.

THIS PRODUCT SHOULD MEET HAZARDOUS MATERIAL CONTROL DIERCTIVE OF JUN SHENG JIE
FROM RAW MATERIAL TO MANUFACTURING, PACKAGE AND DELIVERY.

TOLERANCES 一般公差	UNIT : mm	浙江创都电子科技有限公司				
DISTANCE X. ±0.30 .X ±0.25 .XX ±0.15 .XXX ±0.10						
	DRAWN	TONY	TITLE : TYPE-C-16P-CB1.6-L6.5			
	CHECKED	JACK	PARTS NO. :			
ANGLE X° ±2° .X° ±1° .XX° ±0.5°	APPROVE	DAVID	DWG NO. :			
			SIZE A4	SCALE 1:1	SHEET 1 of 1	REV. A

JSJ_frame_C
Rev. A 2016/08/17