| REV. | ECN NO. | DESCRIPTION | APP. | DATE |
|---|---|---|---|---|
| A | | | | |

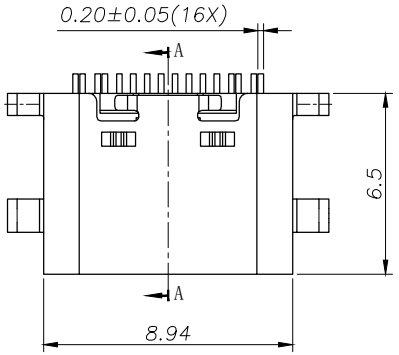


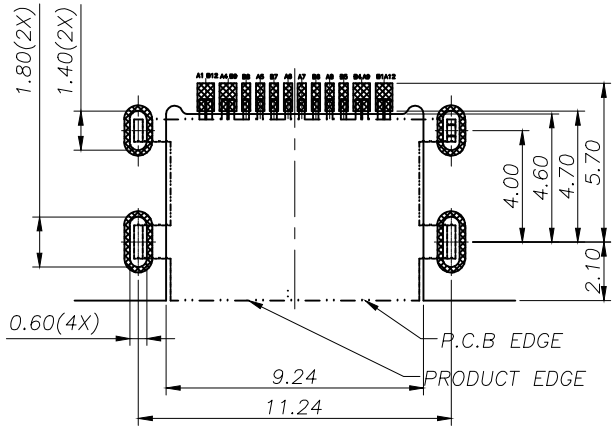


RECOMMENDED PCB LAYOUT(TOP VIEW)

THICKNESS 0.80MM;DEFAULT TOLERANCE:±0.05

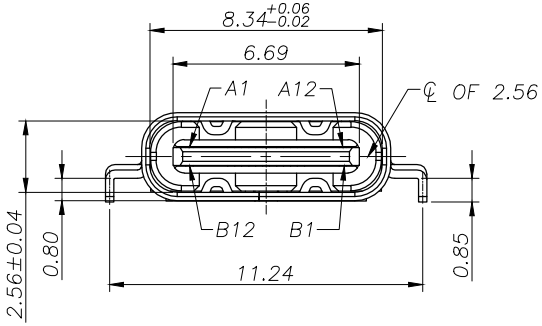


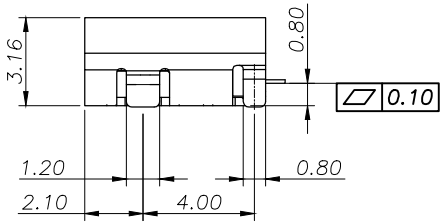


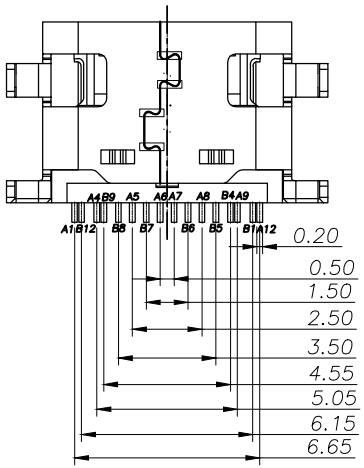


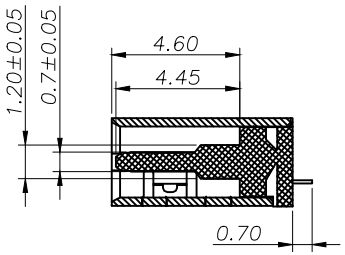


SECTION:A–A

NOTE:

1.MATERIAL SPECIFICATION:
- 1.HOUSING:HIGH TEMPERATURE RESISTANT PLASTIC,UL94 V–0.
- 2.TERMINAL: COPPER ALLOY(C2680)
- 3.FRONT SHELL: STAINLESS STEEL(SUS304)

2.PLATING SPECIFICATION:

2–1.TERMINAL:
Ni 50u" MIN. UNDER PLATED OVER ALL.
Au PLATED ON THE FUNCTIONAL AREA OF CONTACT.
(GOLD PLATING THICKNESS FOLLOW THE P/N)
PLATING SPECIFICATIONS OF THE SOLDER AREA FOLLOW THE P/N

2–2.FRONT SHELL:
PLATING SPECIFICATIONS FOLLOW THE P/N

2–3.MID PLATE:
CLEAR ONLY

3.MECHANICAL PERFORMANCE,
- 3–1.INSERTION FORCE: 0.5~1.2kgf.
- 3–2.REMOVAL FORCE: 0.6kgf~1.5kgf.
- 3–3.DURABILITY: 5000 CYCLES.

4.ELECTRICAL PERFORMANCE,

4–1. VOLTAGE RATING:5 V DC/AC (RMS. max)
CURRENT RATING:5 AMPS. FOR TOTAL VBUS/GND PINS;
1.25AMPS FOR CC PIN,0.25 AMPS. FOR ALL OTHER CONTACT

4–2. LLCR:
VBUS & GND PINS AND OTHER PINS: 40mΩ/PIN MAX.
SHIELD: 50mΩ/MAX.
LLCR MAX. CHANGE OF ALL PINS: 10mΩ.

4–3.INSULATION RESISTANCE: 100MΩ MIN

4–4.DIELECTRIC WITHSTAND VOLTAGE,AC 100V FOR 1 MINUTE.

5. ENVIRONMENTAL PERFORMANCE:
OPERATING TEMPERATURE: –25°C~+85°C.

6.IR REFLOW:
THE PEAK TEMPERATURE ON THE BOARD SHALL BE MAINTAINED FOR 10 SECONDS AT 260°C.

THIS PRODUCT SHOULD MEET HAZARDOUS MATERIAL CONTROL DIERCTIVE OF JUN SHENG JIE FROM RAW MATERIAL TO MANUFACTURING, PACKAGE AND DELIVERY.

| TOLERANCES 一般公差 | UNIT : mm | 浙江创都电子科技有限公司 | | | | |
|---|---|---|---|---|---|---|
| DISTANCE<br>X. ±0.30<br>.X ±0.25<br>.XX ±0.15<br>.XXX ±0.10 | | | | | | |
| | DRAWN | TONY | TITLE : TYPE-C-16P-CB0.8-L6.5 | | | |
| | CHECKED | JACK | PARTS NO. : | | | |
| ANGLE<br>X° ±2°<br>.X° ±1°<br>.XX° ±0.5° | APPROVE | DAVID | DWG NO. : | | | |
| | | | SIZE A4 | SCALE 1:1 | SHEET 1 of 1 | REV. A |