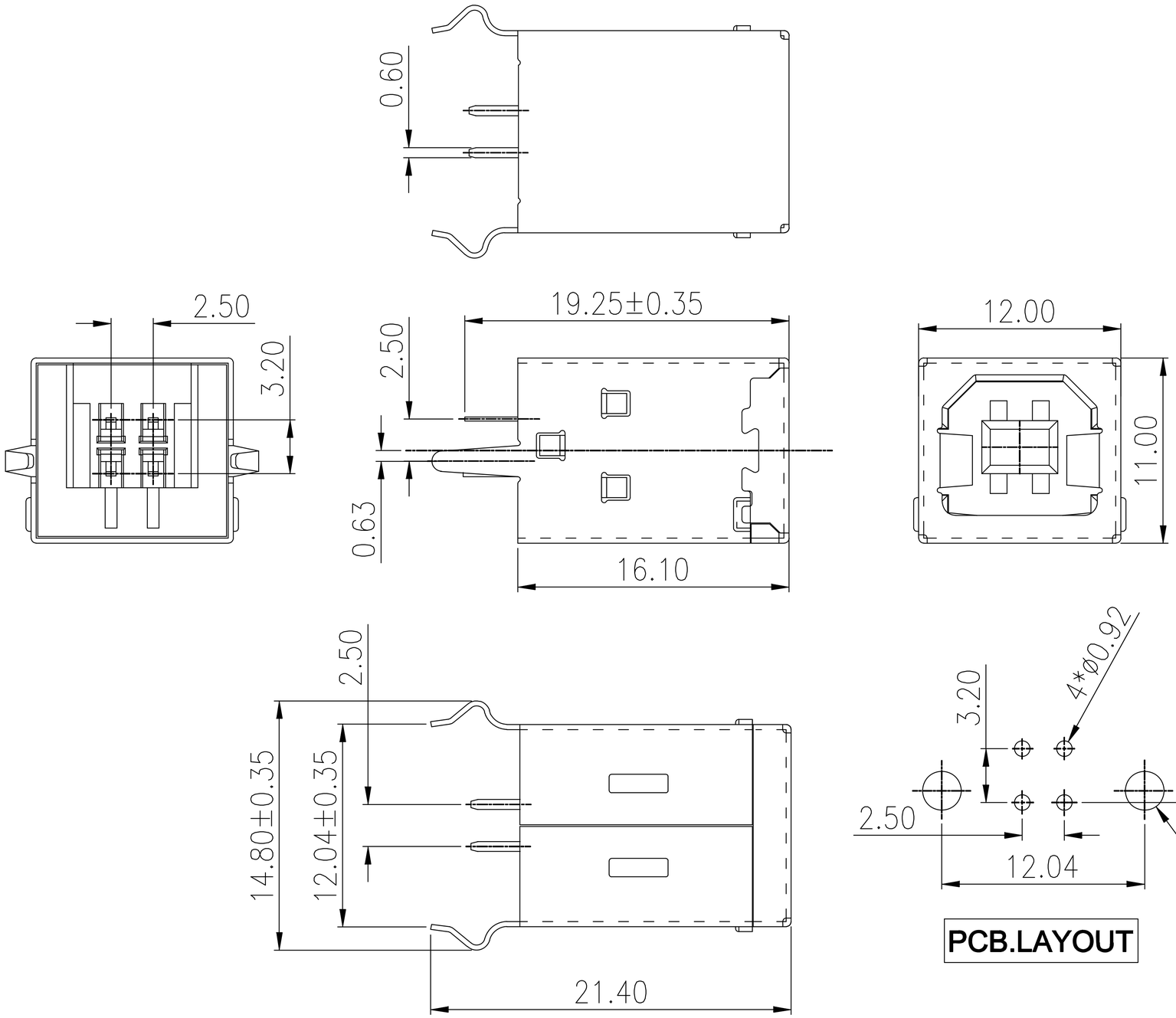


NOTES:

1.MATERIAL:

1.1 Housing:PBT ,UL94-HB

1.2 terminals:Copper Alloy
Gold plated in contact area:
Tin 40u"min plated in termination
Nickel Plated overall

1.3 Shell:SPCC t=0.30mm,
Nickel 40u"min Plated overall

2.ELECTRICAL CHARACTERISTICS:

2.1 Rating Current :1.5 Ampere

2.2 Rating Voltage :30 V Max

2.3 Contact Resistance:30 Milli ohms

2.4 Insulation Resistance:1000 Mega ohms Min.

3.MECHANICAL CHARACTERISTICS:

3.1 Connector Mating force: 35N MAX(3.57Kgf)

3.2 Connector Unmating force:10N min(1.02Kgf)

3.3 Durability:1500Cycles.

4.ENVIRONMENT CHARACTERISTICS:

4.1 Operating temperature:-0℃ to +50℃

4.2 Storage temperature:-20℃ to +60℃

可以过波峰焊

| ITEM: | REVISION | REV BY | APPROVED | DATE | MATL: | SEE SPECIFICATION | | | APPROVED | |
|---|---|---|---|---|---|---|---|---|---|---|
| | | | | | PROJECTION: | THIRD ANGLE PROJECTION | | | CHECKED | |
| | | | | | UNIT: | SCALE | REV(NO) | SHEET | DRAWED | |
| | | | | | mm | 1:1 | A | 1 OF 1 | DATE | 2009.03.25 |

| | | |
|---|---|---|
| 产品名称 PART NAME: | USB2.0-BF-180WJ-BK-CU | |
| 料号 PART No: | | C |

浙江创都电子科技有限公司