REV.	DESCRIPTION	ECN NO.	NAME	DATE

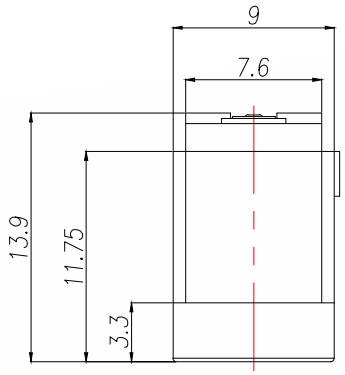

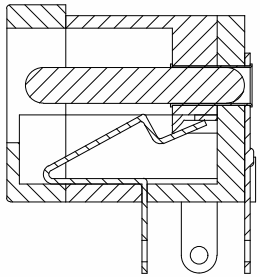

A–A

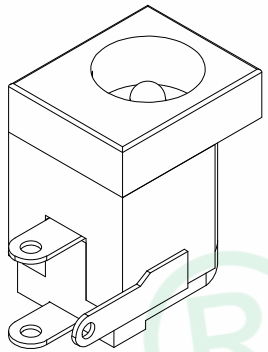

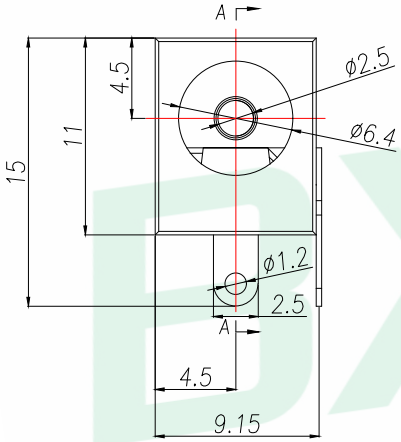

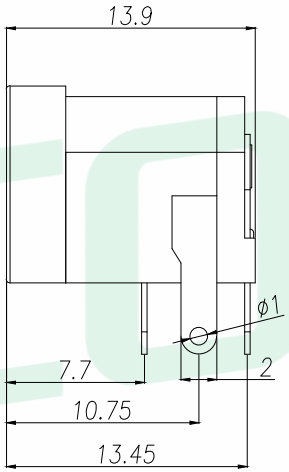

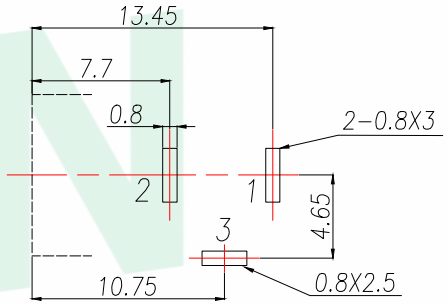

PCB.WELDING DRAWING (TOLERANCE:±0.05)

序号	名称	数量	材料	备注
6	弯片	1	H62 黄铜带	D.Cu/Sn
5	插针	1	H65 黄铜带	D.Cu/Sn
4	后盖	1	PA66 工程塑料	黑
3	平片	1	H62 黄铜带	D.Cu/Sn
2	簧片	1	锡青铜带	
1	基座	1	PA66 工程塑料	黑

Main technical performance	
Rated electrical load	DC 24V 3A
Contact resistance	≤30mΩ
Insulation resistance	≥100MΩ
Pressure resistance	AC 500V 1min
Insertion force	3-30N
Operating temperature range	-20C°~+70C°
service life	5000cycles

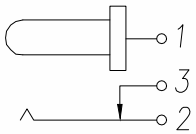

SCHEMATIC

GENERAL TOLERANCE

DIM.	TOL.
x.	±0.50
x.x	±0.25
x.xx	±0.15
GENERAL ANGLE:	
X°	±5°
X.X°	±1°

DONGGUAN BAOXUN PRECISION TECHNOLOGY CO., LTD

BXCONN®

TITLE: DC SOCKET

DWG. NO.: DC-005-2.5-W

CHECKED: MAX

PART NO.: DC-005-2.5-W

DRAWN: ELLA

UNIT:	SCALE:	SHEET:	DWG. SIZE:	LAYER:	APPROVED:
mm	none	1of 1	A4	bxconn	WILL