| REV. | DESCRIPTION | ECN NO. | NAME | DATE |
|---|---|---|---|---|
| | | | | |

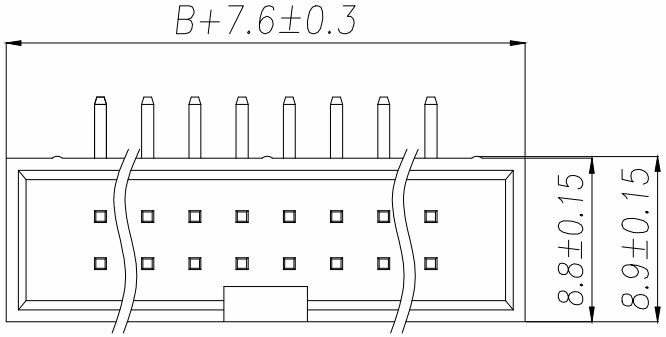


SPECIFICATIONS

Current Rating: 3Amps
Insulation Resistance: 1000MΩ Min
Contact Resistance: 20mΩ Max
Withstanding Voltage: AC 1000V
Operation Temperature: −40°to+105°
Contact Material: Brass
Insrlator Material: Polyester(UL 94V−0)
Contact plating: Gold Flash
Standard: PA6T
Max.Processing Temp: 240°C for30−60seconds
(260°Cfor10seconds)

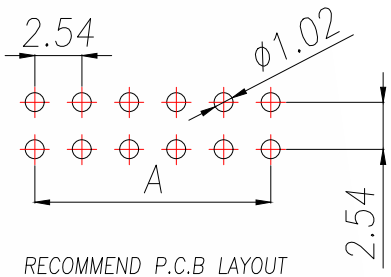


RECOMMEND P.C.B LAYOUT
PCB TOLERANCE:±0.05 (TOP VIEW)

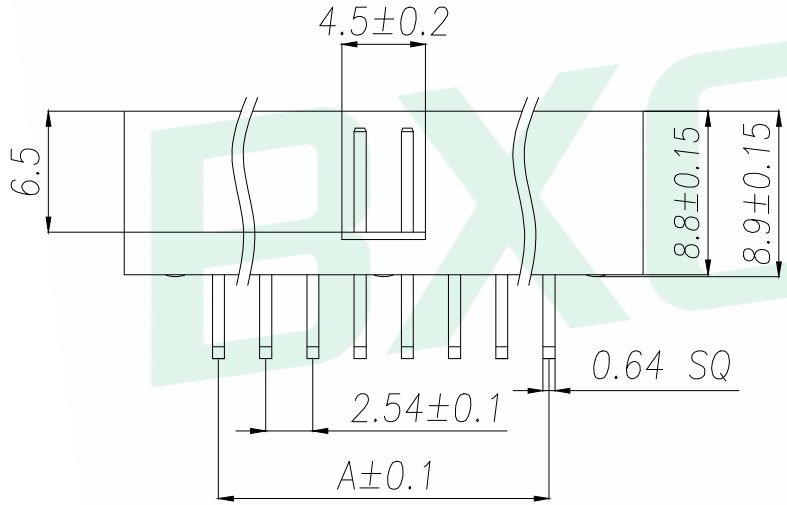


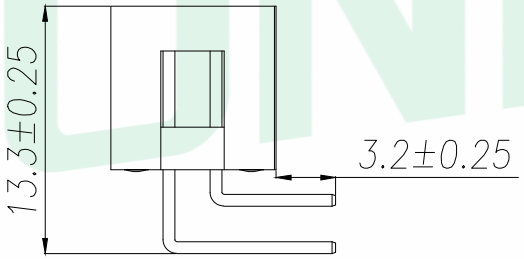


| P/N | PIN | DIM.A | DIM.B |
|---|---|---|---|
| 2.54JN−2−03−W | 2×3 | 5.08 | 7.62 |
| 2.54JN−2−04−W | 2×4 | 7.62 | 10.16 |
| 2.54JN−2−05−W | 2×5 | 10.16 | 12.70 |
| 2.54JN−2−06−W | 2×6 | 12.70 | 15.24 |
| 2.54JN−2−07−W | 2×7 | 15.24 | 17.78 |
| 2.54JN−2−08−W | 2×8 | 17.78 | 20.32 |
| 2.54JN−2−09−W | 2×9 | 20.32 | 22.86 |
| 2.54JN−2−10−W | 2×10 | 22.86 | 25.40 |
| 2.54JN−2−12−W | 2×12 | 27.94 | 30.48 |
| 2.54JN−2−13−W | 2×13 | 30.48 | 33.02 |
| 2.54JN−2−14−W | 2×14 | 33.02 | 35.56 |
| 2.54JN−2−15−W | 2×15 | 35.56 | 38.10 |
| 2.54JN−2−16−W | 2×16 | 38.10 | 40.64 |
| 2.54JN−2−17−W | 2×17 | 40.64 | 43.18 |
| 2.54JN−2−18−W | 2×18 | 43.18 | 45.72 |
| 2.54JN−2−20−W | 2×20 | 48.26 | 50.80 |
| 2.54JN−2−22−W | 2×22 | 53.34 | 55.88 |
| 2.54JN−2−25−W | 2×25 | 60.96 | 63.50 |
| 2.54JN−2−30−W | 2×30 | 73.66 | 76.20 |
| 2.54JN−2−32−W | 2×32 | 78.74 | 81.28 |

GENERAL TOLERANCE

| DIM. | TOL. |
|---|---|
| x. | ±0.30 |
| x.x | ±0.20 |
| x.xx | ±0.10 |
| GENERAL ANGLE: | |
| X° | ±5° |
| X.X° | ±1° |
| X.XX° | ±0.5° |

DONGGUAN BAOXUN PRECISION TECHNOLOGY CO., LTD

BXCONN®

TITLE: 2.54DC3−2XnPin H8.9 90度PC3.2 PB13.3 L15.5−20.5 6T管规

DWG. NO.: 2.54JN−2−X−W

CHECKED: MAX

PART NO.: 2.54JN−2−X−W

DRAWN: ELLA

| UNIT: | SCALE: | SHEET: | DWG. SIZE: | LAYER: |
|---|---|---|---|---|
| mm | none | 1of 1 | A4 | bxconn |

APPROVED: WILL