REV.	DESCRIPTION	ECN NO.	NAME	DATE

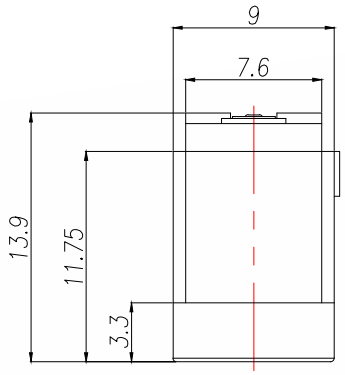

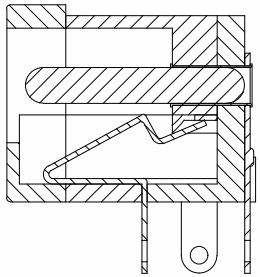

A–A

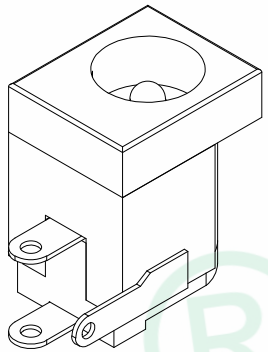

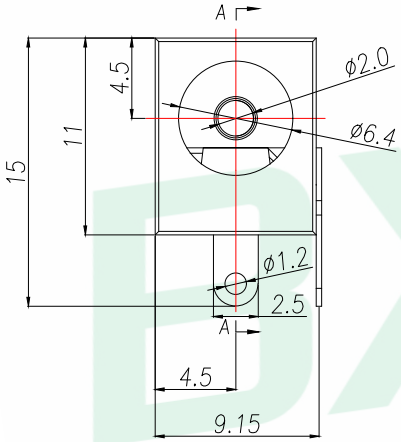

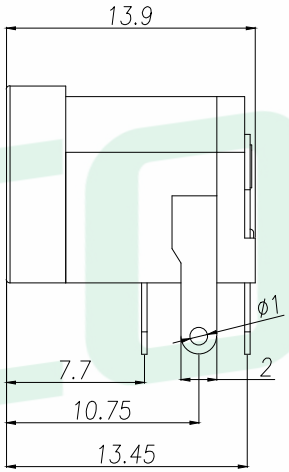

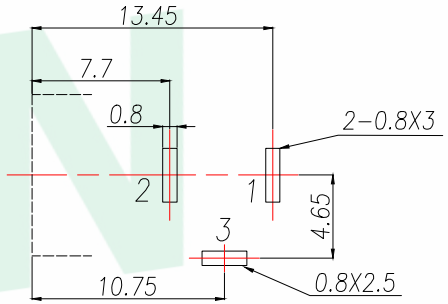

PCB.WELDING DRAWING (TOLERANCE:±0.05)

序号	名称	数量	材料	备注
6	弯片	1	H62 黄铜带	D.Cu/Sn
5	插针	1	H65 黄铜带	D.Cu/Sn
4	后盖	1	PA66 工程塑料	黑
3	平片	1	H62 黄铜带	D.Cu/Sn
2	簧片	1	锡青铜带	
1	基座	1	PA66 工程塑料	黑

Main technical performance	
Rated electrical load	DC 24V 3A
Contact resistance	≤30mΩ
Insulation resistance	≥100MΩ
Pressure resistance	AC 500V 1min
Insertion force	3-30N
Operating temperature range	-20C°~+70C°
service life	5000cycles

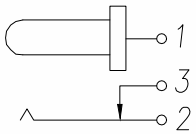

SCHEMATIC

GENERAL TOLERANCE						
DIM. / TOL.		DONGGUAN BAOXUN PRECISION TECHNOLOGY CO., LTD				BXCONN®
x. ±0.50		TITLE: DC SOCKET				
x.x ±0.25		DWG. NO.: DC-005-2.0-W			CHECKED: MAX	
x.xx ±0.15		PART NO.: DC-005-2.0-W			DRAWN: ELLA	
GENERAL ANGLE: X.° ±5° X.X° ±1°		UNIT: mm	SCALE: none	SHEET: 1of 1	DWG. SIZE: A4	LAYER: bxconn	APPROVED: WILL