REV.	DESCRIPTION	ECN NO.	NAME	DATE

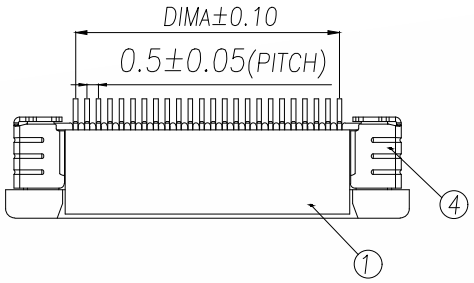

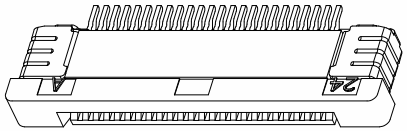

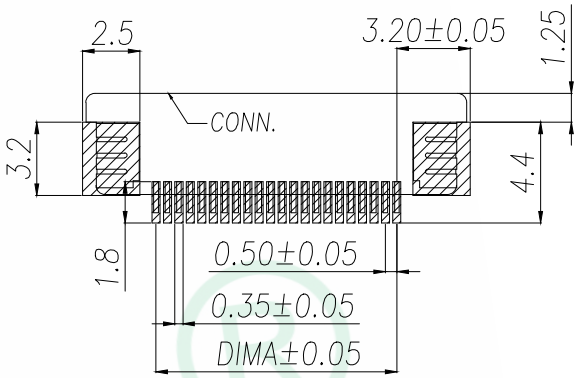

适用线路板(PCB LAYOUT)

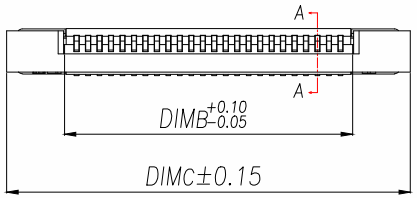

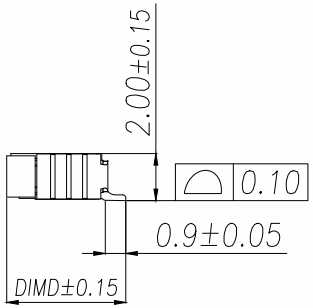

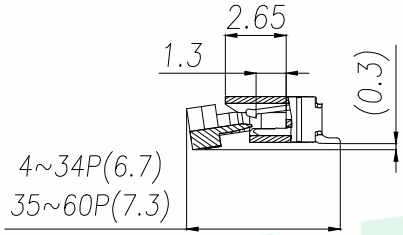

SECTION A–A

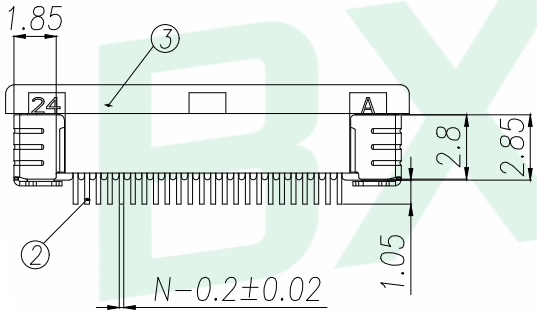

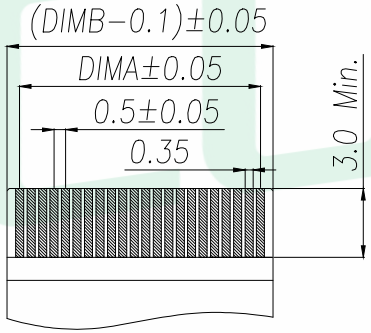

适用扁平线(Applicable Flat Cable)

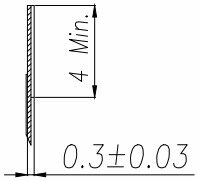

Part No	Pin	A	B	C	D
FPC07–S4–ECA	4	1.50	2.56	7.60	5.20
FPC07–S5–ECA	5	2.00	3.06	8.10	
FPC07–S6–ECA	6	2.50	3.56	8.60	
FPC07–S7–ECA	7	3.00	4.06	9.10	
FPC07–S8–ECA	8	3.50	4.56	9.60	
FPC07–S9–ECA	9	4.00	5.06	10.10	
FPC07–S10–ECA	10	4.50	5.56	10.60	
FPC07–S11–ECA	11	5.00	6.06	11.10	
FPC07–S12–ECA	12	5.50	6.56	11.60	
.....	.....	.....	.....	.....	
FPC07–S34–ECA	34	16.50	17.56	22.60	
FPC07–S35–ECA	35	17.00	18.06	23.10	5.75
FPC07–S36–ECA	36	17.50	18.56	23.60	
.....	....	...	.....	.....	
FPC07–S60–ECA	60	(60–1)*0.5	(60+1)*0.5+0.06	(60+11)*0.5+0.1	

序号	品名	材质
1	0.5拉拔胶芯(H2.0)	LCP UL94V–0 本色
2	0.5拉拔上接端子(H2.0)	铜合金/表面镀锡
3	0.5拉拔卧式后盖(H2.0)	LCP UL94V–0 黑色
4	0.5拉拔焊片(H2.0)	铜合金/表面镀锡

技术指标:

1. 塑件表面应光洁、无毛边、无明显收缩、缺陷、裂纹等现象.
2. 温度范围:–25°C~+85°C.
3. 额定电压:50V,AC/DC.
4. 接触电阻:≤0.03Ω.
5. 绝缘电阻:≥500MΩ

GENERAL TOLERANCE					DONGGUAN BAOXUN PRECISION TECHNOLOGY CO., LTD		BXCONN®
DIM.	TOL.				TITLE: 0.5 Pitch 拉拔卧式上接(H=2.0)		
.x	±0.30						
.xx	±0.20						
.xxx	±0.05						
GENERAL ANGLE:					DWG. NO.: FPC07–SX–ECA	CHECKED: MAX	
.X°	±5°						
.XX°	±2°						
.XXX°	±1°				PART NO.: FPC07–SX–ECA	DRAWN: ELLA	
UNIT: mm	SCALE: none	SHEET: 1of 1	DWG. SIZE: A4	LAYER: bxconn		APPROVED: WILL	