REV.	DESCRIPTION	ECN NO.	NAME	DATE

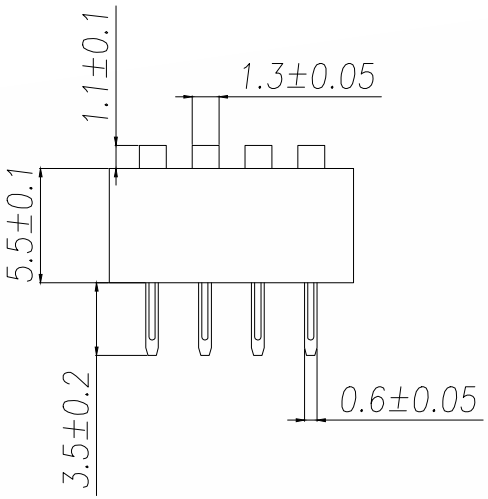

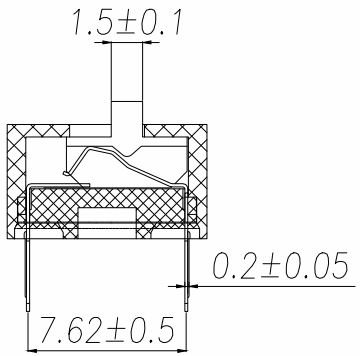

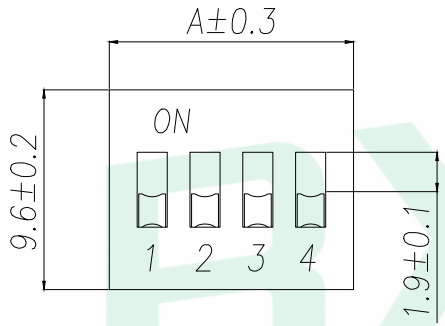

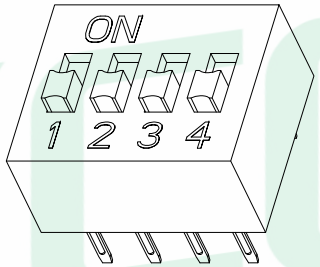

位数	A
1	3.54
2	6.64
3	9.18
4	11.72
5	14.26
6	16.80
7	19.34
8	21.88
9	24.42
10	26.96
12	32.04

NOTES:

1.MECHANICAL:

1>.Operation force: 1000gf Max.

2>.Operation Temperature: −30℃ to +85℃.

3>.Storage Temperature: −40℃ to +85℃.

4>.Mechanical Life: 3000 cycles operations.

5>.Resistance to Soldering: 260±5℃ for 3−5 Seconds.

6>.Please keep switch in "OFF" when welding.

2.MATERIAL:

1>.Base: UL94V−0 PBT Thermoplastic / Color:Black.

2>.COVER: UL94V−0 PBT Thermoplastic / Color:Red, Black, Blue.

3>.ACTUATOR: UL94V−0 PBT High Thermoplastic / Color: White.

4>.TERMINAL: Copper alloy with gold plating for1.5u".

3.ELECTRICAL:

1>.Non−switching Rating:100mA at 50VDC.

2>.Switching Rating: 25mA at 24VDC.

3>.Contact Resistance: Inital 50mΩ Max.
Contact Resistance: After life 100mΩ Max.

4>.Insulation Resistance:100MΩ Min at 500VDC.

5>.Dielectric Strength: 500VAC for 60seconds.

6>.Switch Capacitance: 5PF Max at 1MHZ.

4.PACKING: 121pcs/Tube, 6050pcs/Box.

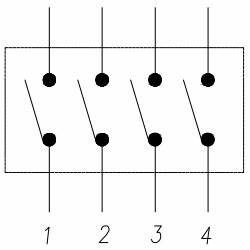

电路图

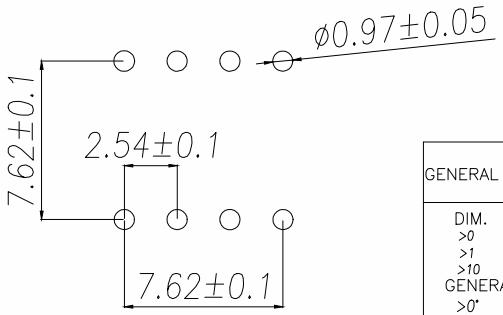

PCB开孔

GENERAL TOLERANCE		DONGGUAN BAOXUN PRECISION TECHNOLOGY CO., LTD					BXCONN®
DIM.	TOL.	TITLE: PRODUCT Family DS Series Pitch 2.54mm					
>0	±0.05						
>1	±0.10						
>10	±0.30						
GENERAL ANGLE:		DWG. NO.: DS−XR−P−T				CHECKED: MAX	
>0°	±0.5°						
>5°	±1.0°	PART NO.: DS−XR−P−T				DRAWN: ELLA	
		UNIT: mm	SCALE: none	SHEET: 1of 1	DWG. SIZE: A4	LAYER: bxconn	APPROVED: WILL