REV.	DESCRIPTION	ECN NO.	NAME	DATE

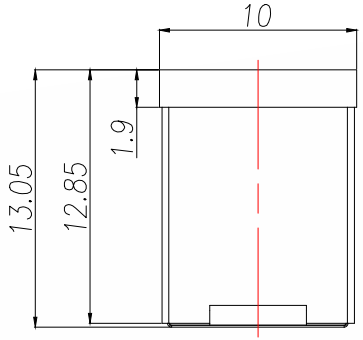

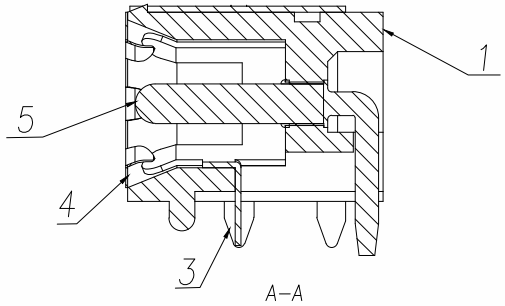

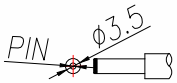

RECOMMEND PULG

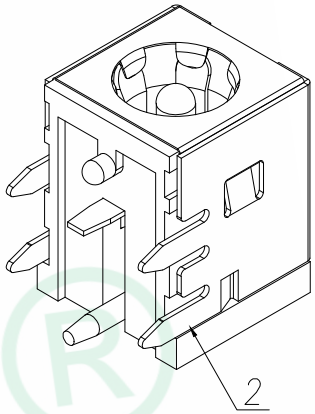

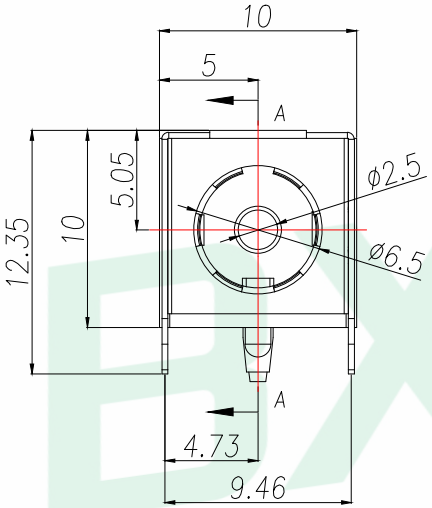

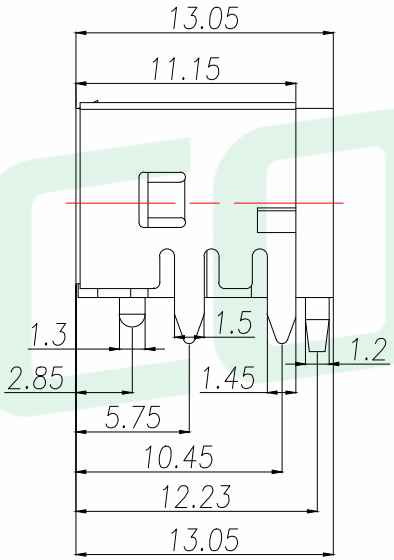

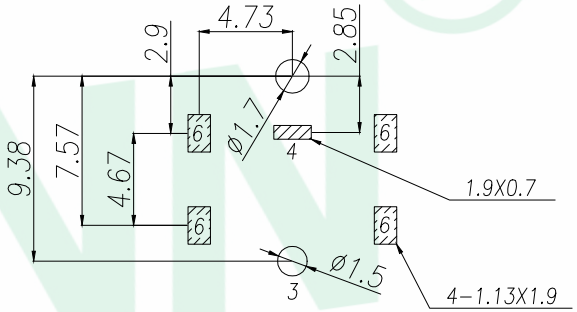

PCB.WELDING DRAWING (TOLERANCE:±0.05)

序号	名称	数量	材料	备注
5	圆针	1	黄铜棒	镀银
4	盖片	1	H62黄铜带(Y)	镀银
3	簧片	1	磷铜带	铜锡
2	屏蔽罩	1	H62黄铜带(Y)	黑
1	基座	1	PPA	黑

Main technical performance	
Rated electrical load	DC 24V 8A
Contact resistance	≤0.03Ω
Insulation resistance	≥100MΩ DC250V
Pressure resistance	AC 500V 1min
Insertion force	3-30N
Operating temperature range	-40C°~+85C°
service life	5000cycles

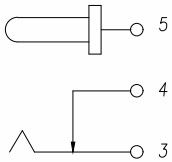

SCHEMATIC

GENERAL TOLERANCE

DIM.	TOL.
x.	±0.30
x.x	±0.25
x.xx	±0.15
GENERAL ANGLE:	
X°	±5°
X.X°	±1°

DONGGUAN BAOXUN PRECISION TECHNOLOGY CO., LTD

BXCONN®

TITLE: DC SOCKET

DWG. NO.: DC-007B-2.5-W

CHECKED: MAX

PART NO.: DC-007B-2.5-W

DRAWN: ELLA

UNIT:	SCALE:	SHEET:	DWG. SIZE:	LAYER:	APPROVED:
mm	none	1of 1	A4	bxconn	WILL