REV.	DESCRIPTION	ECN NO.	NAME	DATE

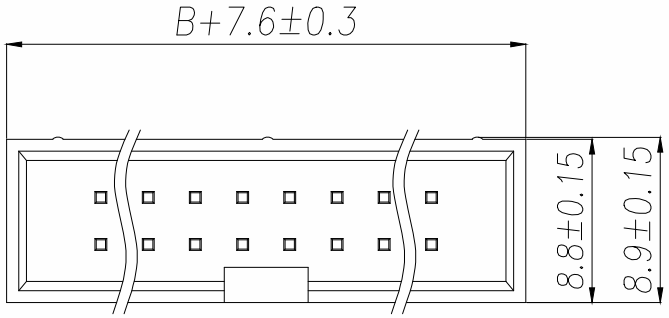

SPECIFICATIONS

Current Rating: 3Amps
Insulation Resistance: 1000MΩ Min
Contact Resistance: 20mΩ Max
Withstanding Voltage: AC 1000V
Operation Temperature: −40°to+105°
Contact Material: Brass
Insrlator Material: Polyester(UL 94V−0)
Contact plating: Gold Flash
Standard: PA6T
Max.Processing Temp: 240°C for30−60seconds
(260°Cfor10seconds)

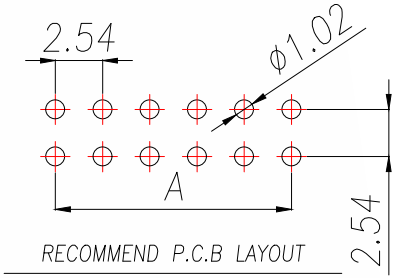

RECOMMEND P.C.B LAYOUT
PCB TOLERANCE:±0.05 (TOP VIEW)

P/N	PIN	DIM.A	DIM.B
2.54JN−2−03−Z	2×3	5.08	7.62
2.54JN−2−04−Z	2×4	7.62	10.16
2.54JN−2−05−Z	2×5	10.16	12.70
2.54JN−2−06−Z	2×6	12.70	15.24
2.54JN−2−07−Z	2×7	15.24	17.78
2.54JN−2−08−Z	2×8	17.78	20.32
2.54JN−2−09−Z	2×9	20.32	22.86
2.54JN−2−10−Z	2×10	22.86	25.40
2.54JN−2−12−Z	2×12	27.94	30.48
2.54JN−2−13−Z	2×13	30.48	33.02
2.54JN−2−14−Z	2×14	33.02	35.56
2.54JN−2−15−Z	2×15	35.56	38.10
2.54JN−2−16−Z	2×16	38.10	40.64
2.54JN−2−17−Z	2×17	40.64	43.18
2.54JN−2−18−Z	2×18	43.18	45.72
2.54JN−2−20−Z	2×20	48.26	50.80
2.54JN−2−22−Z	2×22	53.34	55.88
2.54JN−2−25−Z	2×25	60.96	63.50
2.54JN−2−30−Z	2×30	73.66	76.20
2.54JN−2−32−Z	2×32	78.74	81.28

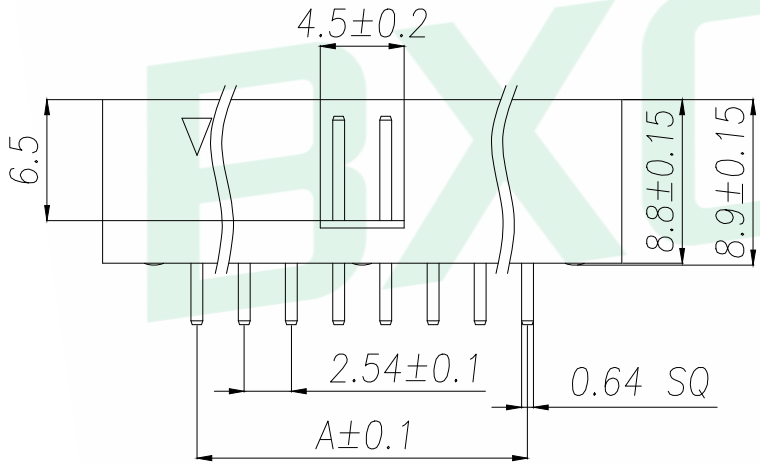

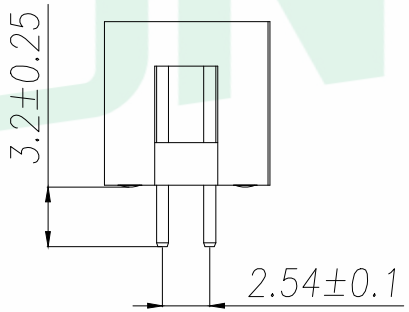

GENERAL TOLERANCE						
DIM.	TOL.	DONGGUAN BAOXUN PRECISION TECHNOLOGY CO., LTD				BXCONN®
x.	±0.30	TITLE: 2.54DC3−NPin H8.9 180度 PC3.2 L11.5 6T				
x.x	±0.20					
x.xx	±0.10					
GENERAL ANGLE:		DWG. NO.: 2.54JN−2−X−Z			CHECKED: MAX	
X°	±5°					
X.X°	±1°	PART NO.: 2.54JN−2−X−Z			DRAWN: ELLA	
X.XX°	±0.5°					
		UNIT: mm	SCALE: none	SHEET: 1of 1	DWG. SIZE: A4	LAYER: bxconn	APPROVED: WILL