REV.	DESCRIPTION	ECN NO.	NAME	DATE

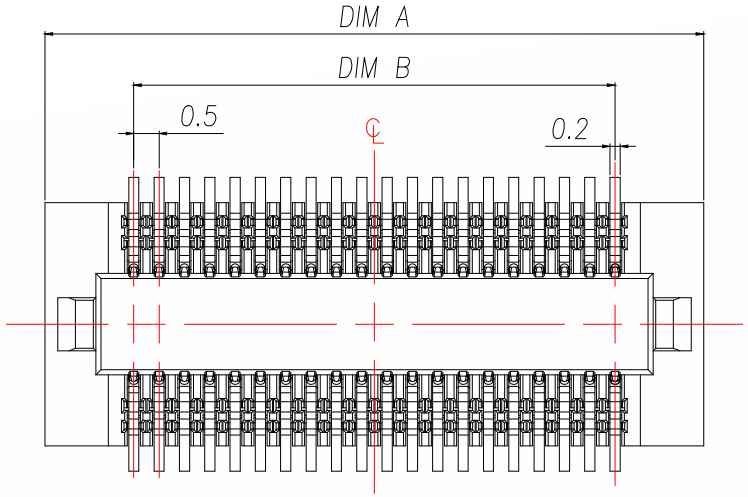

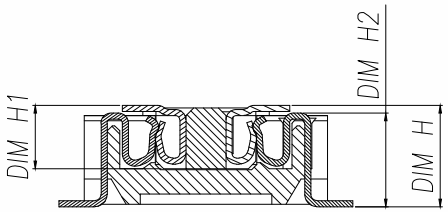

PIN	DIM A	DIM B
B0501FSV25-10P	5.5	2.0
B0501FSV25-12P	6.0	2.5
B0501FSV25-14P	6.5	3.0
B0501FSV25-16P	7.0	3.5
B0501FSV25-20P	8.0	4.5
B0501FSV25-22P	8.5	5.0
B0501FSV25-24P	9.0	5.5
B0501FSV25-30P	10.5	7.0
B0501FSV25-34P	11.5	8.0
B0501FSV25-40P	13.0	9.5
B0501FSV25-50P	15.5	12.0
B0501FSV25-60P	18.0	14.5
B0501FSV25-70P	20.5	17.0
B0501FSV25-80P	23.0	19.5
B0501FSV25-100P	28.0	24.5

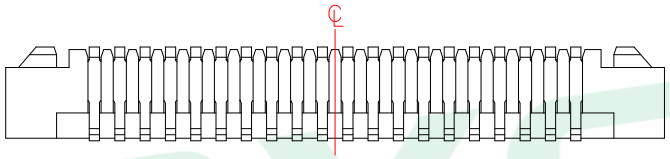

NOTES:
MATERIAL:
1.HOUSING:THERMO-PLASTIC. UL 94V-0 NATURE
2.CONTACT:PHOSPHOR BRONZE
CONTACT:SEE ORDER INF ORMATION;
SOLDER:GOLD FLASH
UNDERPLATING:50~120u" NICKEL OVERALL
ELECTRICAL:
1.CURRENT RATING:0.5A 60V AC/DC
2.WITHSTANDING VOLTAGE:150V AC for 1 min
3.CONTACT RESISTANCE:90mΩ MAX
4.INSULATION RESISTANCE:1000MΩ MIN
ENVIRONMENTAL:
1. OPERATING TEMPERATURE:-55°C TO +125°C.

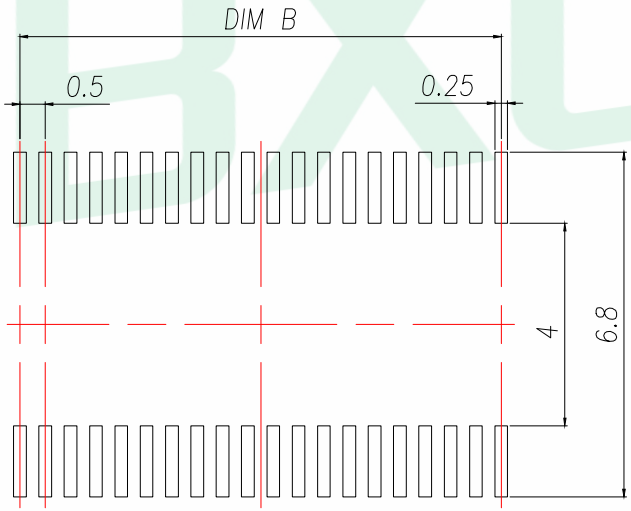

RECOMMENDED PCB LAYOUT
TOLERANCE:±0.05

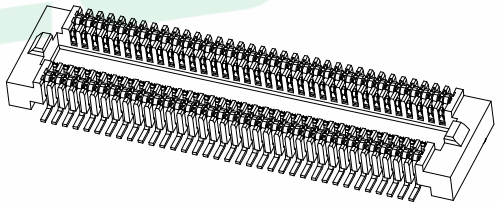

The product is high	DIM H	DIM H1	DIM H2
B0501FSV15-XP	1.50	1.25	1.35
B0501FSV20-XP	2.00	1.25	1.85
B0501FSV25-XP	2.50	1.75	1.85

GENERAL TOLERANCE					
DIM.	TOL.	DONGGUAN BAOXUN PRECISION TECHNOLOGY CO., LTD			BXCONN®
x.	±0.30	TITLE: 0.5mm PITCH BTB CONN SOCKET NARROW SPACING			
x.x	±0.20				
x.xx	±0.10				
GENERAL ANGLE:		DWG. NO.: B0501FSV25-XP		CHECKED: MAX	
X.°:	±2°				
X.X°:	±	PART NO.: B0501FSV25-XP		DRAWN: ELLA	
UNIT: mm	SCALE: none	SHEET: 1of 1	DWG. SIZE: A4	LAYER: bxconn	APPROVED: WILL

REV.	DESCRIPTION	ECN NO.	NAME	DATE

Tape width 24 and 44 mm

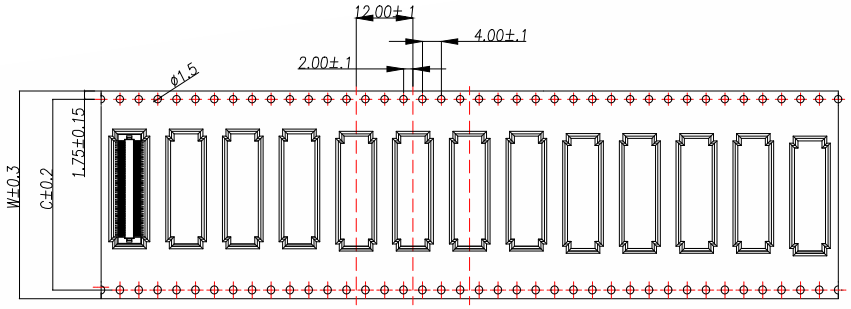

PULL OUT DIRECTION

NOTE:

1. 10 Sprocket hole pitch cumulative tolerance ±0.20.
2. Carrier camber is within 1mm in 100mm.
3. Material: black conductive polystyrene alloy.
4. Material Thickness: 0.3±0.05mm.
5. For tape width(dim W)44 and 72mm pilot holes are provided on one sides.

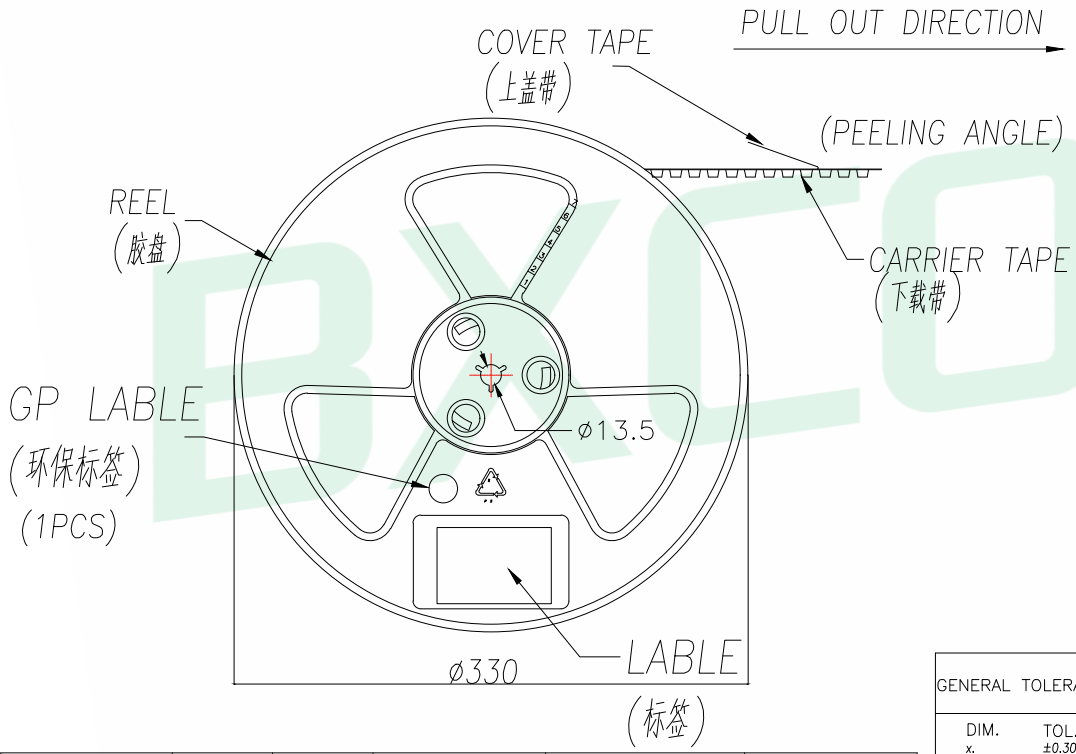

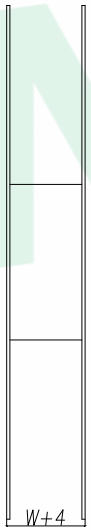

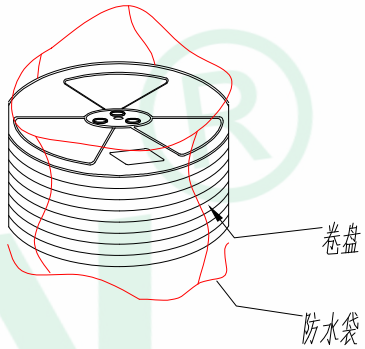

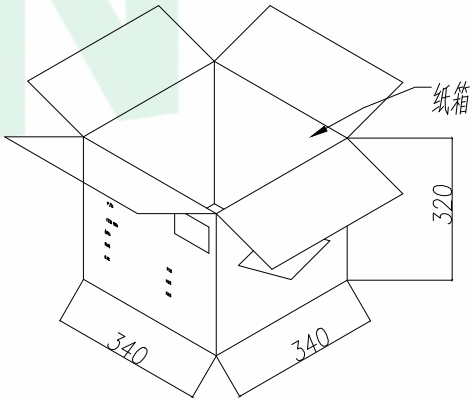

PIN NO.	W	C	PCS/REEL	PCS/CARTON	SUM(PCS)
10~58PIN	24.00	-	2000	11	22000
60~70PIN	32.00	28.40	2000	8	16000
72~100PIN	44.00	40.40	2000	6	12000

GENERAL TOLERANCE	DONGGUAN BAOXUN PRECISION TECHNOLOGY CO., LTD					BXCONN®
DIM. TOL. x. ±0.30 x.x ±0.20 x.xx ±0.10 GENERAL ANGLE: X.°: ±2° X.X°: ±	TITLE: 0.5mm PITCH BTB CONN SOCKET NARROW SPACING					
	DWG. NO.: B0501FSV25-XP				CHECKED: MAX	
	PART NO.: B0501FSV25-XP				DRAWN: ELLA	
	UNIT: mm	SCALE: none	SHEET: 1of 1	DWG. SIZE: A4	LAYER: bxconn	APPROVED: WILL