HAOYU

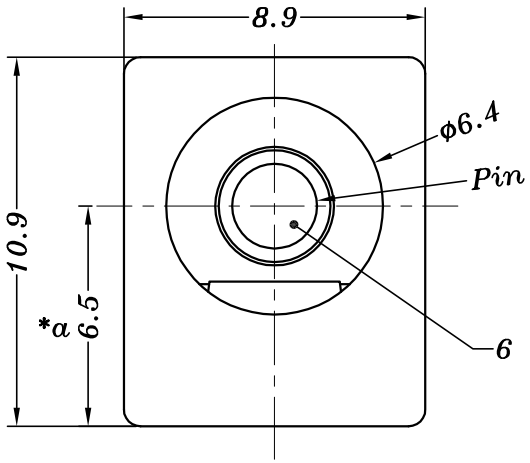

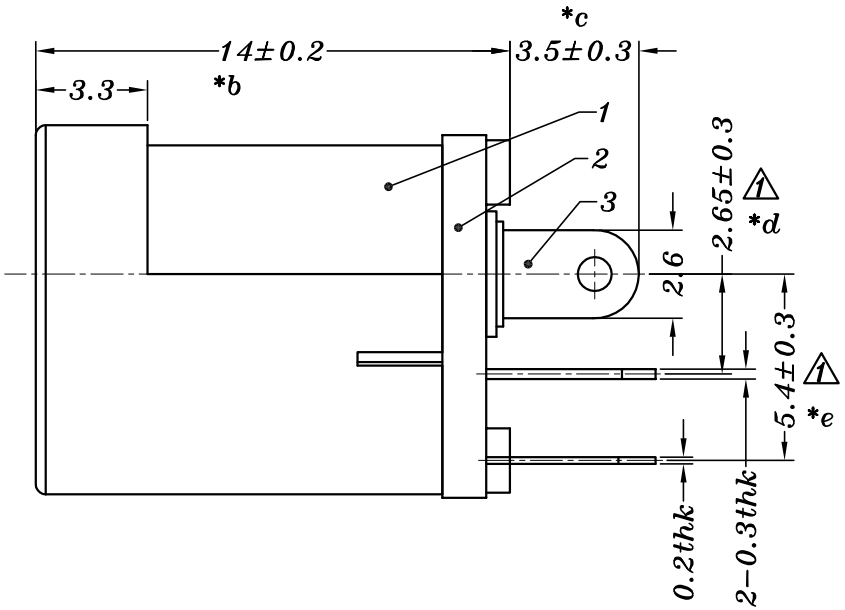

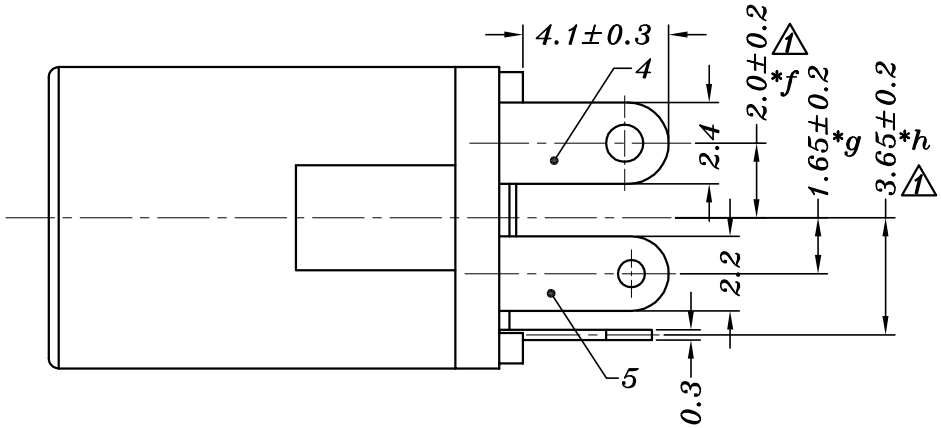

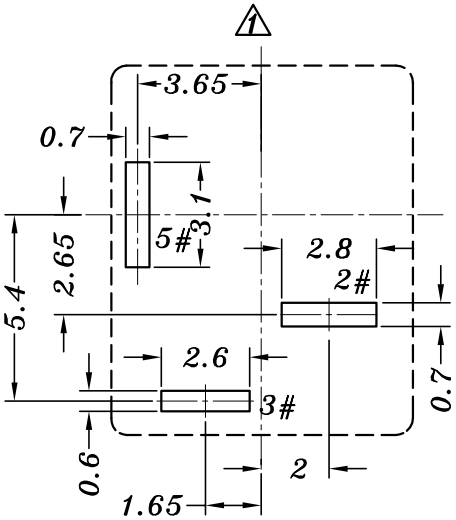

P.C.B LAYOUT

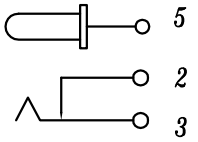

SCHEMATIC

PIN	φ2.0	φ2.5
APPD.		

NO.	PART NAME	MATERIAL	QTY	FINISHING
6	DC015 PING	BRASS	1	Ni PLATED
5	DC012 3#SPRING	SUS	1	Ag PLATED
4	DC012A 2#CURVE PIECE	BRASS	1	Ag PLATED
3	DC012A 5#FLAT PIECE	BRASS	1	Ag PLATED
2	DC012A BASE	PBT	1	BLACK
1	DC012 CASE	PBT/PA66	1	BLACK

TOLERANCE UNLESS SPECIFIED
UP TO 5mm: ±0.1
ABOVE 5mm: ±0.2
ANGULAR ±1°

NO	DATE	REVISIONS	BY	APPD
A1	2020.11.24	1 修正尺寸公差	GYW	
A0	2012.10.11	初 版	liu	

TITLE:DC JACK
MODEL:DC-012A -2.5
UNIT : MM
SCALE: 4:1
ROHS COMPLIANT

DWN
CHK'D
APPD
PRO.AGL:
REV :A1

HOOYA ELECTRONIC CO. LTD
皓宇电子有限公司