THIS DRAWING IS UNPUBLISHED. RELEASED FOR PUBLICATION
© COPYRIGHT By – ALL RIGHTS RESERVED.

REVISIONS					
P	LTR	DESCRIPTION	DATE	DWN	APVD
	AB	REVISED PER ECR-25-253035	06OCT2025	CKN	JP

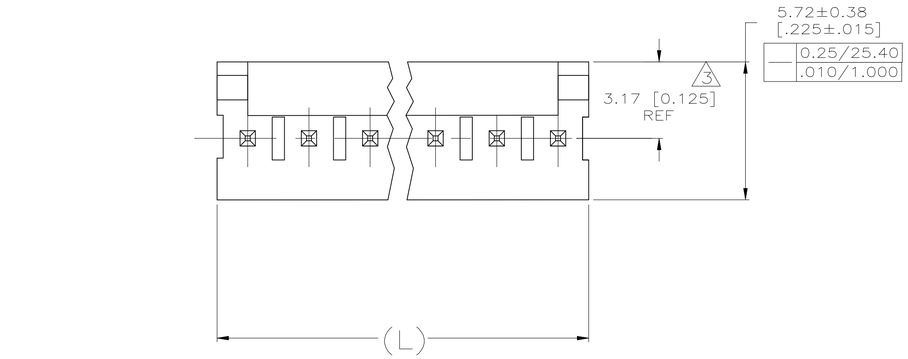

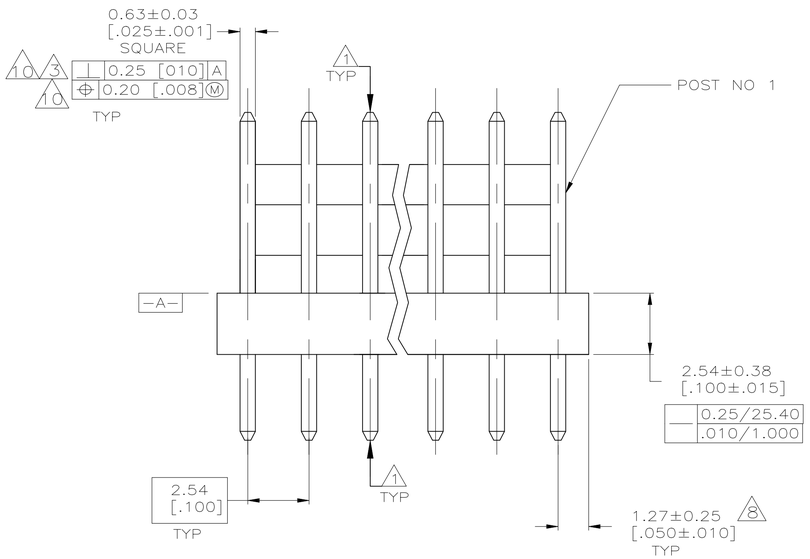

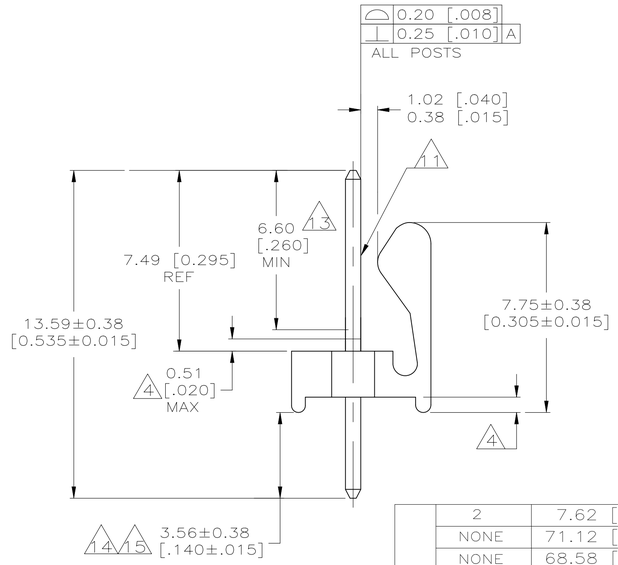

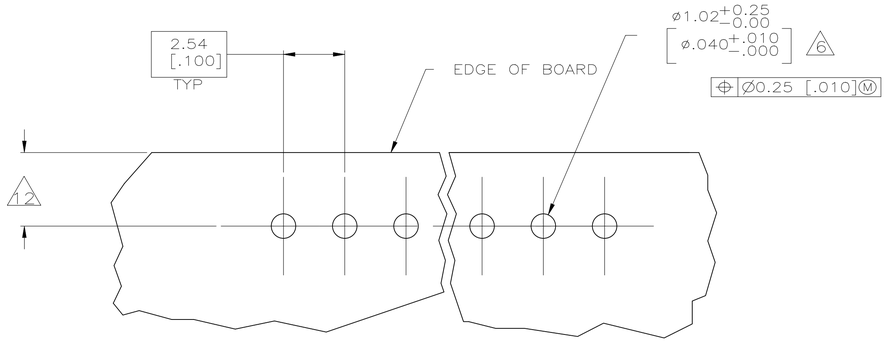

RECOMMENDED MOUNTING HOLE PATTERN
FOR 1.60 [.063] THICK P.C. BOARD 2

1. POST TO WITHSTAND 13 NEWTONS (3 LBS) MINIMUM AXIAL FORCE IN BOTH DIRECTIONS SHOWN WITHOUT DISLODGING.
2. TOLERANCES APPLY TO SOLDER SIDE OF BOARD.
3. MEASURED AT –A–
4. PLASTIC FLASH PERMITTED IN THIS AREA.
5. PARTS COMPLY WITH AMP SOLDERABILITY SPEC. NO. 109-11-2.
6. ONE HOLE MAY BE UNDERSIZED 0.81–0.89 [.032–.035] DIA. FOR ASSEMBLY RETENTION DURING WAVE SOLDERING.
7. MATERIAL: HEADER–THERMOPLASTIC POLYESTER 94V–0 (NATURAL)
   POST–COPPER ALLOY
   FINISH–USE PLATING NOTES 13 & 14 FOR –2 THRU –28 AND NOTES 13 & 15 FOR –32 THRU –58
8. COORDINATE DIMENSION APPLIES FROM CENTER OF ACTUAL FEATURE.
9. PLASTIC BURRS CAUSED BY CUT–OFF TOOLING ARE PERMITTED WITHIN THE MAXIMUM TOLERANCE ENVELOPE.
10. POSTS TO BE MEASURED WHEN STRIP IS HELD FLAT.
11. POST MUST WITHSTAND TWO 90° BENDS AGAINST EXTRUSION WITHOUT BREAKING.
12. DIMENSION SHOULD BE 3.30 [.130] MIN WHEN MATING WITH A MTA–100 CONNECTOR ASSEMBLY OR A CST–100 CONNECTOR ASSEMBLY.
13. PLATING: GOLD PLATE AREA, 0.00038 [.000015] GOLD OR 0.00008 [.000003] MIN GOLD FLASH OVER 0.00030 [.000012] PALLADIUM NICKEL, ONLY IN FUNCTIONAL CONTACT AREA AND OTHER AREAS WITH OPTIMIZED THICKNESS PER TE CONNECTIVITY'S DISCRETION, ALL SIDES, OVER NICKEL UNDERPLATE, 0.00127 [.000050] MIN, ALL SIDES AND ENTIRE LENGTH OF POST.
14. PLATING: MATTE TIN PLATE AREA, 0.00381–0.00889 [.000150–.000350] THICK, ALL FOUR SIDES 3.56 [.140] MINIMUM.
15. PLATING: MATTE TIN PLATE AREA,0.00381–0.00889 [.000150–.000350] THICK, ALL FOUR SIDES 3.56 [.140] MINIMUM.
16. OBSOLETE PARTS: OBSOLETE CIS STREAMLINING PER D.RENAUD/D.SINISI
17. PRELIMINARY–NOT FOR PRODUCTION.

	OMITTED POST NO.	DIM (L)	NO.OF POSN	ASSEMBLY
LEAD FREE	2	7.62 [.300]	3	17 6–641126–3
	NONE	71.12 [2.800]	28	5–641126–8
	NONE	68.58 [2.700]	27	5–641126–7
	NONE	66.04 [2.600]	26	5–641126–6
	NONE	63.50 [2.500]	25	5–641126–5
	NONE	60.96 [2.400]	24	5–641126–4
	NONE	58.42 [2.300]	23	5–641126–3
	NONE	55.88 [2.200]	22	5–641126–2
	NONE	53.34 [2.100]	21	5–641126–1
OBSOLETE	NONE	50.80 [2.000]	20	~~5–641126–0~~
	NONE	48.26 [1.900]	19	4–641126–9
	NONE	45.72 [1.800]	18	4–641126–8
	NONE	43.18 [1.700]	17	4–641126–7
	NONE	40.64 [1.600]	16	4–641126–6
	NONE	38.10 [1.500]	15	4–641126–5
	NONE	35.56 [1.400]	14	4–641126–4
	NONE	33.02 [1.300]	13	4–641126–3
	NONE	30.48 [1.200]	12	4–641126–2
	NONE	27.94 [1.100]	11	4–641126–1
	NONE	25.40 [1.000]	10	4–641126–0
	NONE	22.86 [.900]	9	3–641126–9
	NONE	20.32 [.800]	8	3–641126–8
	NONE	17.78 [.700]	7	3–641126–7
	NONE	15.24 [.600]	6	3–641126–6
	NONE	12.70 [.500]	5	3–641126–5
	NONE	10.16 [.400]	4	3–641126–4
	NONE	7.62 [.300]	3	3–641126–3
	NONE	5.08 [.200]	2	3–641126–2

	OMITTED POST NO.	DIM (L)	NO.OF POSN	ASSEMBLY
LEAD FREE	NONE	71.12 [2.800]	28	~~2–641126–8~~ SUPERSEDED BY 5–641126–8 16
	NONE	68.58 [2.700]	27	~~2–641126–7~~ SUPERSEDED BY 5–641126–7 16
	NONE	66.04 [2.600]	26	~~2–641126–6~~ SUPERSEDED BY 5–641126–6 16
	NONE	63.50 [2.500]	25	~~2–641126–5~~ SUPERSEDED BY 5–641126–5 16
	NONE	60.96 [2.400]	24	~~2–641126–4~~ SUPERSEDED BY 5–641126–4 16
	NONE	58.42 [2.300]	23	~~2–641126–3~~ SUPERSEDED BY 5–641126–3 16
	NONE	55.88 [2.200]	22	~~2–641126–2~~ SUPERSEDED BY 5–641126–2 16
	NONE	53.34 [2.100]	21	~~2–641126–1~~ SUPERSEDED BY 5–641126–1 16
	NONE	50.80 [2.000]	20	~~2–641126–0~~ SUPERSEDED BY 5–641126–0 16
	NONE	48.26 [1.900]	19	~~1–641126–9~~ SUPERSEDED BY 4–641126–9 16
	NONE	45.72 [1.800]	18	~~1–641126–8~~ SUPERSEDED BY 4–641126–8 16
	NONE	43.18 [1.700]	17	~~1–641126–7~~ SUPERSEDED BY 4–641126–7 16
	NONE	40.64 [1.600]	16	~~1–641126–6~~ SUPERSEDED BY 4–641126–6 16
	NONE	38.10 [1.500]	15	~~1–641126–5~~ SUPERSEDED BY 4–641126–5 16
	NONE	35.56 [1.400]	14	~~1–641126–4~~ SUPERSEDED BY 4–641126–4 16
	NONE	33.02 [1.300]	13	~~1–641126–3~~ SUPERSEDED BY 4–641126–3 16
	NONE	30.48 [1.200]	12	~~1–641126–2~~ SUPERSEDED BY 4–641126–2 16
	NONE	27.94 [1.100]	11	~~1–641126–1~~ SUPERSEDED BY 4–641126–1 16
	NONE	25.40 [1.000]	10	~~1–641126–0~~ SUPERSEDED BY 4–641126–0 16
	NONE	22.86 [.900]	9	~~641126–9~~ SUPERSEDED BY 3–641126–9 16
	NONE	20.32 [.800]	8	~~641126–8~~ SUPERSEDED BY 3–641126–8 16
	NONE	17.78 [.700]	7	~~641126–7~~ SUPERSEDED BY 3–641126–7 16
	NONE	15.24 [.600]	6	~~641126–6~~ SUPERSEDED BY 3–641126–6 16
	NONE	12.70 [.500]	5	~~641126–5~~ SUPERSEDED BY 3–641126–5 16
	NONE	10.16 [.400]	4	~~641126–4~~ SUPERSEDED BY 3–641126–4 16
	NONE	7.62 [.300]	3	~~641126–3~~ SUPERSEDED BY 3–641126–3 16
	NONE	5.08 [.200]	2	~~641126–2~~ SUPERSEDED BY 3–641126–2 16

THIS DRAWING IS A CONTROLLED DOCUMENT.

DIMENSIONS: mm [INCHES]

TOLERANCES UNLESS OTHERWISE SPECIFIED:
0 PLC ±
1 PLC ±
2 PLC ± 0.13 [.005]
3 PLC ±
4 PLC ±
ANGLES ±

MATERIAL 7 FINISH 7

DWN S. HOOVER 26–JAN–2005
CHK D. BOSSI 26–JAN–2005
APVD D. BOSSI 26–JAN–2005

PRODUCT SPEC 108–1050
APPLICATION SPEC 114–1019
WEIGHT –

TE Connectivity

NAME MTA100 HDR ASSY, FRICTION LOCK, NOTCHED, .025 SQUARE STRAIGHT POST, –

SIZE A1 | CAGE CODE 00779 | DRAWING NO C–641126 | RESTRICTED TO

CUSTOMER DRAWING | SCALE 8:1 | SHEET 1 OF 1 | REV AB

4805 (1/15)