修订 Revise	变更描述 Change Description	变更单号 Change Order Number	签名 Signature	日期 Date

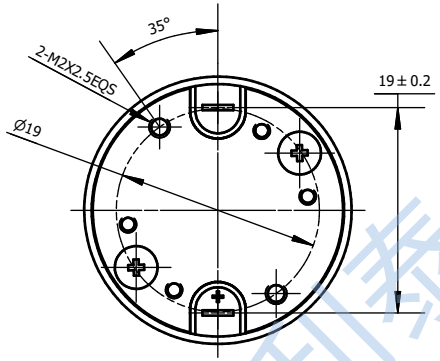

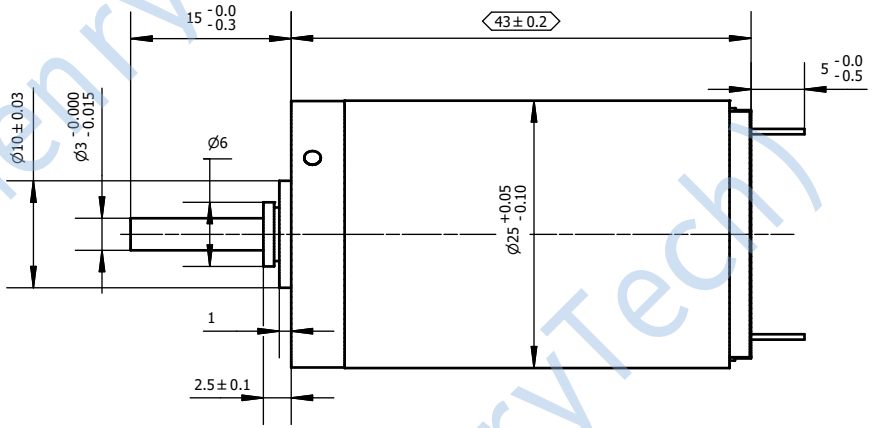

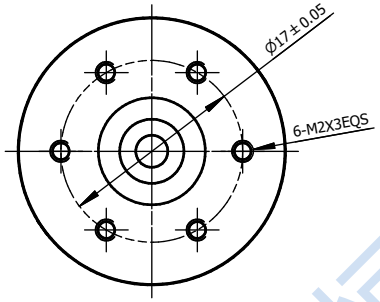

技术要求Technical Requirements:

1. 电机表面无划伤、碰伤、擦伤、油污及异物等影响外观的缺陷;

(The motor surface shall be free from appearance-related defects such as scratches, dents, abrasions, oil stains, and foreign matter.)

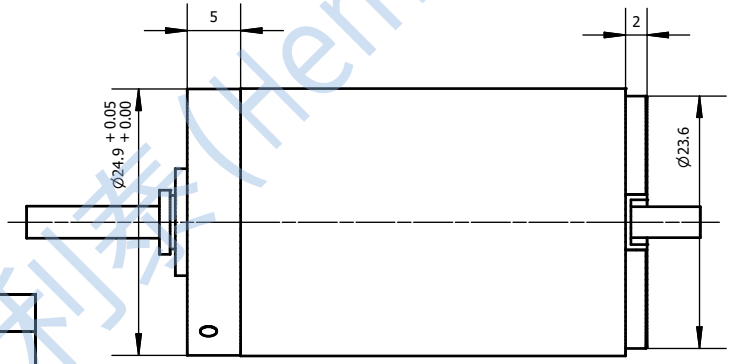

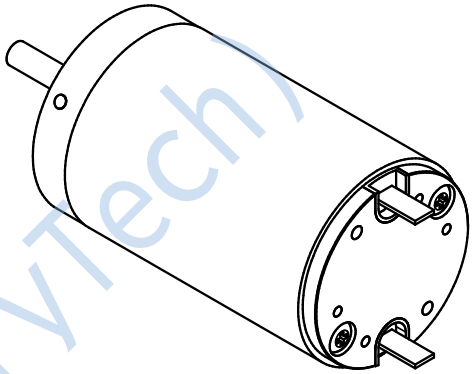

电机参数表Motor Parameter Table			
1	额定电压Nominal Voltage	28	VDC
2	额定转矩Nominal Torque	30	mNm
3	额定转速Nominal Speed	10315	rpm
4	额定电流Nominal Current	1.53	A
5	空载转速No-load Speed	12500	rpm
6	空载电流No-load Current	0.06	A
7	空载启动电压 No-load	0.2	V
8	轴向间隙Axial y	0.1	mm
9	工作温度Operating Temperature	-55~85	℃

制图 Drawn		版次 Revision	比例 Scale	型号规格(Model/Specification) HM-DC-max-D26mm
审核 Reviewed		投 影 Projection		品名(Product Name) 石墨电刷电机 (Graphite brush motor)
批准 Approved		未注公差 General tolerance X.	长度 Length ±0.2 / 角度 Angle ±5°	成都恒利泰科技有限公司 Chengdu HenryTech Technology co., Ltd
			*为重点尺寸 * Critical dimension	单位Unit mm

恒利泰(HenryTech)