Mechanical:

REV.	ECN NO.	DESCRIPTION	DATE	APPD
A	REL		2023-09-10	

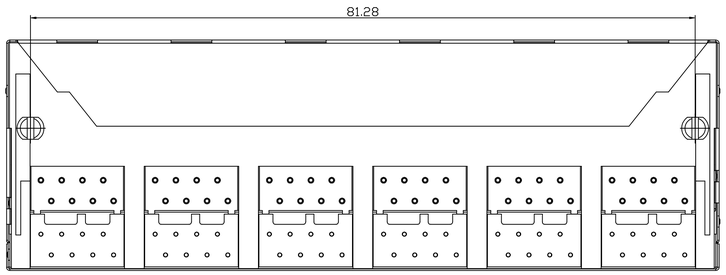

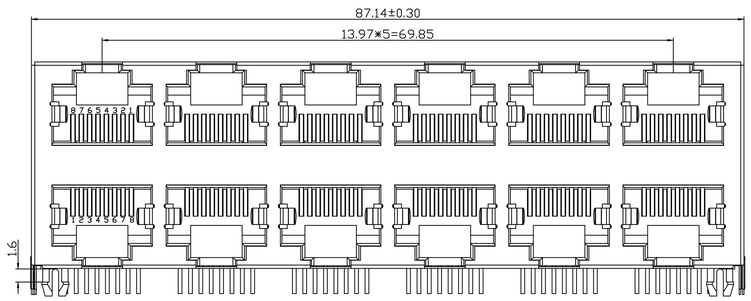

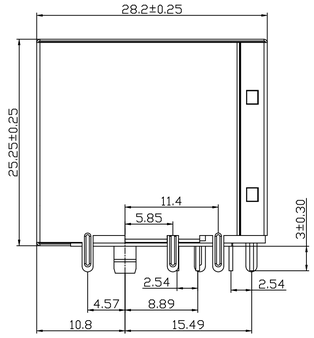

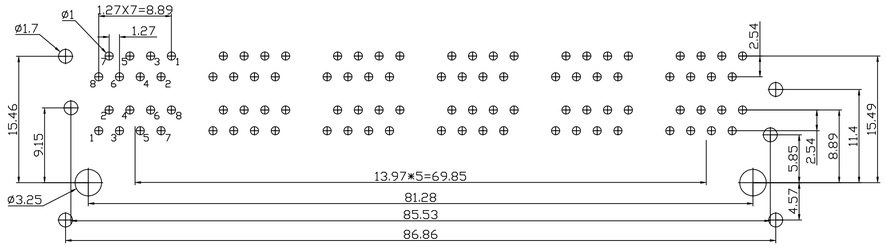

RECOMMENDED PCB LAYOUT(TOP VIEW)

RoHS 2011/65/EU

NOTES:

ELECTRICAL:

1. VOLTAGE RATING: 125V AC.
2. CURRENT RATING: 1.5A.
3. CONTACT RESISTANCE: 50 mΩ MAX.
4. INSULATION RESISTANCE: 500 MΩ MIN @ 500V DC.
5. DIELECTRIC STRENGTH: 1000V AC 50Hz or 60Hz,1MIN.

MECHANICAL:

1. INSERT MATERIAL: GLASS FILLED POLYESTER (PBT UL94V-0).
2. CONTACT MATERIAL: PHOSPHOR BRONZE (ROUND PIN Ø0.46mm)
3. CONTACT PLATING: GOLD FLASH OVER NICKEL.
4. SHIELD: 0.20mm THICKNESS COPPER ALLOY PLATED NICKEL
5. MATING/UNMATING FORCE: 20N MAX.
6. RETENTION STRENGTH: 50N PENDANT 60±5S.
7. OPERATING LIFE: 750 CYCLES MIN.

ENVIRONMENTAL:

1. STORAGE: -40℃ ～ +85℃ RELATIVE HUMIDITY<70%.
2. OPERATION: -40℃ ～ +85℃.
3. WAVE SOLDER TIP TEMPERATURE AND TIME: 250℃,5 SEC.
4. UL CERTIFICATION: FILE NUMBER E484635

X.X	±0.30	APPD:	TOM	LINK-PP INT'L TECHNOLOGY CO., LIMITED	
X.XX	±0.25	CHKD:	JAMES	TITLE: RJ45 2X6 CONNECTOR	
X.XXX	±0.15	DR:	JULY		
ANGLES	±1°	UNIT:	mm	PART NO.: LPJE309-0DNL	
		SCALE: 2/1	SHEET: 1/1	REV: A	DWG NO.: LP23091017

LINK-PP Website: http://www.link-pp.com Email: info@link-pp.com Tel: +86-0752-3322916 Fax: +86-0752-3161926