HT 系列 HT series

·125℃、2,000 小时寿命保证 125℃, 2,000 hours life guarantee

·极低等效串联电阻(ESR)并可承受大纹波电流

.Very low equivalent series resistance (ESR) and can withstand large ripple currents

·符合 ROHS 和 REACH 指令 Comply with the ROHS and REACH directives

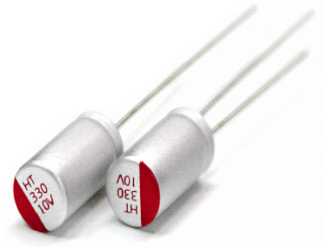

◆特性参数表 Characteristic parameter list

WV	Cap (μF)	尺寸 ΦDxL(mm)	损失角正切值(tanδ) (20℃, 120Hz)	漏电流 (μA)(max)	等效串联电阻 (ESR) (mΩ max./20℃, 100kHz)	额定纹波电流 (mArms/125℃, 100kHz)	产品代码
2.5V	470	6.3X8	0.08	500	16	1150	HT0E477M0608PC
	560	6.3X8	0.08	500	16	1250	HT0E567M0608PC
	680	6.3X9	0.08	500	14	1400	HT0E687M0609PC
	820	6.3X8	0.08	500	16	1450	HT0E827M0608PC
		6.3X9			14	1500	HT0E827M0609PC
	1000	6.3X9	0.08	500	12	1550	HT0E108M0609PC
		8X8			12	1600	HT0E108M0808PC
	1500	8X11.5	0.08	750	12	1750	HT0E158M0811PC
	2200	8X16	0.08	1100	12	2100	HT0E228M0816PC
		10X12			12	2100	HT0E228M1012PC
	3300	10X12	0.08	1650	12	2250	HT0E338M1012PC
	4700	10X16	0.08	2350	12	2400	HT0E478M1016PC
6.3V	100	5X7	0.08	500	28	1050	HT0J107M0507PC
	270	5X8	0.08	500	18	1200	HT0J277M0508PC
	330	5X9	0.08	500	16	1250	HT0J337M0509PC
		6.3X5.5			48	1850	HT0J337M0605PC
	470	6.3X7	0.08	592	16	1250	HT0J477M0607PC
		6.3X8			16	1350	HT0J477M0608PC
	500	5.5X7	0.08	630	28	1350	HT0J507M5507PC
	560	6.3X8	0.08	705	16	1350	HT0J567M0608PC
		6.3X9			16	1400	HT0J567M0609PC
		8X8			14	1450	HT0J567M0808PC
	680	6.3X10.5	0.08	856	16	1500	HT0J687M0610PC
	820	5.5X11	0.10	1033	18	1550	HT0J827M5511PC
		6.3X9			16	1550	HT0J827M0609PC
		6.3X11.5			14	1650	HT0J827M0611PC
		8X11.5			14	1700	HT0J827M0811PC
	1000	6.3X11.5	0.10	1260	14	1750	HT0J108M0611PC
		8X11.5			14	1800	HT0J108M0811PC
	1500	6.3X15	0.10	1890	14	1900	HT0J158M0615PC
		8X11.5			14	1950	HT0J158M0811PC
	2200	8X16	0.10	2772	14	2150	HT0J228M0816PC
		10X12			14	2150	HT0J228M1012PC
	3300	10X13.5	0.10	4158	14	2350	HT0J338M1013PC
		10X16			14	2450	HT0J338M1016PC
	4700	10X16	0.10	5922	14	2600	HT0J478M1016PC

WV	Cap (μF)	尺寸 ΦDxL(mm)	损失角正切值(tanδ) (20℃, 120Hz)	漏电流 (μA)(max)	等效串联电阻 (ESR) (mΩ max./20℃, 100kHz)	额定纹波电流 (mArms/125℃, 100kHz)	产品代码
7.5V	220	6.3X5.5	0.08	500	28	900	HT0Q227M0605PC
	330	6.3X8	0.08	500	16	1100	HT0Q337M0608PC
	470	6.3X8	0.08	705	16	1200	HT0Q477M0608PC
	560	6.3X9	0.08	840	14	1350	HT0Q567M0609PC
		8X8			14	1400	HT0Q567M0808PC
	680	6.3X11.5	0.08	1020	14	1500	HT0Q687M0611PC
		8X8	0.10		14	1550	HT0Q687M0808PC
	820	6.3X11.5	0.10	1230	14	1650	HT0Q827M0611PC
	1000	8X11.5	0.10	1500	14	1800	HT0Q108M0811PC
	1200	8X11.5	0.10	1800	14	2200	HT0Q128M0811PC
	1500	8X11.5	0.10	2250	14	2350	HT0Q158M0811PC
		10X12			12	2400	HT0Q158M1012PC
	2200	10X12	0.10	3300	12	2600	HT0Q228M1012PC
	3300	10X13.5	0.10	4950	12	2750	HT0Q338M1013PC
		10X16			12	2900	HT0Q338M1016PC
10V	100	5X7	0.10	500	28	1100	HT1A107M0507PC
	220	5X9	0.10	500	22	1250	HT1A227M0509PC
		6.3X5.5			48	850	HT1A227M0605PC
	330	5X9	0.10	660	22	1400	HT1A337M0509PC
		6.3X8			18	1400	HT1A337M0608PC
	470	6.3X10.5	0.10	940	16	1500	HT1A477M0610PC
	560	6.3X11.5	0.10	1120	16	1650	HT1A567M0611PC
	680	8X11.5	0.10	1360	16	1750	HT1A687M0811PC
	820	8X11.5	0.10	1640	16	1850	HT1A827M0811PC
	1000	10X12	0.10	2000	16	2050	HT1A108M1012PC
	1200	8X11.5	0.10	2400	16	2100	HT1A128M0811PC
	1500	8X16	0.10	3000	14	2250	HT1A158M0816PC
	2200	10X13.5	0.10	4400	14	2450	HT1A228M1013PC
	3300	10X16	0.10	6600	14	2700	HT1A338M1016PC
12V	330	5X9	0.10	792	22	1400	HT1B337M0509PC
	470	5.5X9	0.10	1128	18	1500	HT1B477M5509PC
	820	5.5X15	0.10	1968	18	1650	HT1B477M5515PC
14V	600	6.3X9	0.10	1680	14	1100	HT1L607M0609PC
16V	100	5X7	0.12	500	28	950	HT1C107M0507PC
		6.3X5.5			48	850	HT1C107M0605PC
		6.3X7			20	950	HT1C107M0607PC
	220	5X11.5	0.12	704	18	980	HT1C227M0511PC
		6.3X7			20	980	HT1C227M0607PC
		6.3X8			18	1050	HT1C227M0608PC
	270	5X11.5	0.12	864	18	1100	HT1C277M0511PC
		6.3X7			18	1100	HT1C277M0607PC

WV	Cap (μF)	尺寸 ΦDxL(mm)	损失角正切值(tanδ) (20℃, 120Hz)	漏电流 (μA)(max)	等效串联电阻（ESR） (mΩ max./20℃, 100kHz)	额定纹波电流 (mArms/125℃, 100kHz)	产品代码
16V	330	5X15	0.12	1056	18	1250	HT1C337M0515PC
		5.5X9			16	1200	HT1C337M5509PC
		5.5X11.5			16	1250	HT1C337M5511PC
		6.3X7			18	1150	HT1C337M0607PC
		6.3X9			16	1250	HT1C337M0609PC
	470	5.5X11.5	0.12	1504	16	1250	HT1C477M5511PC
		5.5X15			16	1450	HT1C477M5515PC
		6.3X9			16	1350	HT1C477M0609PC
		6.3X10.5			16	1400	HT1C477M0610PC
		6.3X11.5			16	1450	HT1C477M0611PC
		8X8			14	1550	HT1C477M0808PC
		8X11.5			14	1700	HT1C477M0811PC
	560	5.5X15	0.12	1792	14	1100	HT1C567M5515PC
	680	5.5X15	0.12	2176	14	1500	HT1C687M5515PC
		6.3X11.5			14	1500	HT1C687M0611PC
		8X8			14	1600	HT1C687M0808PC
		8X10.5			18	1150	HT1C687M0810PC
		8X11.5			14	1750	HT1C687M0811PC
	820	6.3X11.5	0.12	2624	14	1600	HT1C827M0611PC
		6.3X15			14	1700	HT1C827M0615PC
		8X11.5			14	1800	HT1C827M0811PC
		8X13.5			14	1850	HT1C827M0813PC
	1000	6.3X15	0.12	3200	14	1800	HT1C108M0615PC
		8X16			12	1950	HT1C108M0816PC
		10X12				1950	HT1C108M1012PC
	1200	8X16	0.12	3840	12	2000	HT1C128M0816PC
		10X16	0.12	3840	12	2100	HT1C128M1016PC
	1500	8X16	0.12	4800	12	2150	HT1C158M0816PC
		10X16			12	2350	HT1C158M1016PC
	2200	10X16	0.12	7040	12	2650	HT1C228M1016PC
	3300	10X16	0.12	10560	12	3750	HT1C338M1016PC
20V	470	6.3X11.5	0.12	1180	35	1750	HT1D477M0611PC
25V	10	5X8	0.12	500	85	1050	HT1E106M0508PC
	33	5X7	0.12	500	58	650	HT1E336M0507PC
	47	5X8	0.12	500	58	800	HT1E476M0508PC
		6.3X7			58	800	HT1E476M0607PC
	68	6.3X5.5	0.12	500	38	800	HT1E686M0605PC
	82	6.3X7	0.12	500	38	1150	HT1E826M0607PC
	100	5X7	0.12	500	38	850	HT1E107M0507PC
		5X9			38	1250	HT1E107M0509PC
		6.3X5.5			55	850	HT1E107M0605PC
		6.3X7			38	1150	HT1E107M0607PC
		6.3X8			35	1250	HT1E107M0608PC
		6.3X10.5			28	1400	HT1E107M0610PC
		8X8			28	1400	HT1E107M0808PC
		8X10.5			28	1550	HT1E107M0810PC

WV	Cap (μF)	尺寸 ΦDxL(mm)	损失角正切值(tanδ) (20℃, 120Hz)	漏电流 (μA)(max)	等效串联电阻（ESR） (mΩ max./20℃, 100kHz)	额定纹波电流 (mArms/125℃, 100kHz)	产品代码
25V	120	5X9	0.12	600	38	1250	HT1E127M0509PC
	150	6.3X7	0.12	750	38	1400	HT1E157M0607PC
		6.3X8			38	1450	HT1E157M0608PC
		8X8			28	1500	HT1E157M0808PC
		8X11.5			28	1650	HT1E157M0811PC
	180	5X11.5	0.12	800	38	1400	HT1E187M0511PC
		6.3X7			38	1450	HT1E187M0607PC
		8X8			32	1550	HT1E187M0808PC
		10X12			28	1750	HT1E187M1012PC
	220	5X11.5	0.12	1100	38	1400	HT1E227M0511PC
		5.5X8.5			38	1350	HT1E227M5508PC
		5.5X9			38	1450	HT1E227M5509PC
		5.5X11.5			38	1400	HT1E227M5511PC
		6.3X7			38	1500	HT1E227M0607PC
		6.3X8			38	1500	HT1E227M0608PC
		6.3X11.5			32	1650	HT1E227M0611PC
		8X8			32	1600	HT1E227M0808PC
		8X10.5			32	1850	HT1E227M0810PC
		8X11.5			28	1950	HT1E227M0811PC
		10X12			28	1800	HT1E227M1012PC
	270	5X11.5	0.12	1350	35	1550	HT1E277M0511PC
		6.3X8			35	1500	HT1E277M0608PC
		6.3X9			35	1500	HT1E277M0609PC
		6.3X10.5			35	1550	HT1E277M0610PC
		6.3X11.5			32	1550	HT1E277M0611PC
		10X10.5			32	1800	HT1E277M1010PC
		10X11.5			28	1800	HT1E277M1011PC
		10X12			28	1800	HT1E277M1012PC
	330	5.5X11.5	0.12	1650	35	1550	HT1E337M5511PC
		5.5X15			35	1650	HT1E337M5515PC
		6.3X9			35	1600	HT1E337M0609PC
		6.3X10.5			35	1650	HT1E337M0610PC
		6.3X11.5			35	1750	HT1E337M0611PC
		6.3X15			35	1800	HT1E337M0615PC
		8X8			32	1750	HT1E337M0808PC
		8X11.5			28	1780	HT1E337M0811PC
		8X16			28	1850	HT1E337M0816PC
		10X12			20	1850	HT1E337M1012PC
	390	6.3X9	0.12	1950	35	1650	HT1E397M0609PC
	470	5.5X15	0.12	2350	35	2000	HT1E477M5515PC
		6.3X11.5			35	2050	HT1E477M0611PC
		6.3X15			35	2100	HT1E477M0615PC
		8X8			28	2050	HT1E477M0808PC
		8X10.5			20	1780	HT1E477M0810PC
		8X11.5			20	2350	HT1E477M0811PC
		8X16			20	1950	HT1E477M0816PC
		10X12			20	1950	HT1E477M1012PC
	560	6.3X15	0.12	2800	35	2300	HT1E567M0615PC
		8X10.5			20	1850	HT1E567M0810PC
		8X11.5			20	1950	HT1E567M0811PC
		8X12.5			20	1950	HT1E567M0812PC
		10X12			20	2050	HT1E567M1012PC

WV	Cap (μF)	尺寸 ΦDxL(mm)	损失角正切值(tanδ) (20℃, 120Hz)	漏电流 (μA)(max)	等效串联电阻（ESR） (mΩ max./20℃, 100kHz)	额定纹波电流 (mArms/125℃, 100kHz)	产品代码
25V	680	6.3X15	0.12	3400	35	2450	HT1E687M0615PC
		8X11.5			20	2550	HT1E687M0811PC
		8X12.5			20	2450	HT1E687M0812PC
		8X16			20	2900	HT1E687M0816PC
		10X12			28	2750	HT1E687M1012PC
	820	6.3X15	0.12	4100	25	2250	HT1E827M0615PC
		8X16			20	3150	HT1E827M0816PC
		10X12			24	2950	HT1E827M1012PC
	1000	8X16	0.12	5000	20	3150	HT1E108M0816PC
		10X12			20	3350	HT1E108M1012PC
		10X13.5			20	3500	HT1E108M1013PC
	1200	10X16	0.12	6000	20	3750	HT1E128M1016PC
	1500	10X16	0.12	7500	20	3900	HT1E158M1016PC
	2200	10X16	0.12	11000	20	1450	HT1E228M1016PC
35V	10	5X8	0.12	500	55	650	HT1V106M0508PC
	47	5X7	0.12	500	55	850	HT1V476M0507PC
	100	6.3X7	0.12	700	55	950	HT1V107M0607PC
		6.3X8			55	1050	HT1V107M0608PC
	150	6.3X9	0.12	1050	38	1250	HT1V157M0609PC
	220	6.3X11.5	0.12	1540	38	1700	HT1V227M0611PC
		8X11.5			28	1850	HT1V227M0811PC
		10X12			28	2050	HT1V227M1012PC
	330	8X13.5	0.12	2310	28	2000	HT1V337M0813PC
		8X16			24	2100	HT1V337M0816PC
	470	10X12	0.12	3290	28	2150	HT1V477M1012PC
	560	8X16	0.12	3290	26	2250	HT1V567M0816PC
	680	10X16	0.12	4760	26	2400	HT1V687M1016PC
	820	10X16	0.12	5740	26	2550	HT1V827M1016PC
	1000	10X16	0.12	7000	26	2700	HT1V108M1016PC
50V	4.7	6.3X5.5	0.12	500	58	550	HT1H475M0605PC
	10	5X8	0.12	500	58	600	HT1H106M0508PC
	22	5X9	0.12	500	58	650	HT1H226M0509PC
	33	6.3X8	0.12	500	58	700	HT1H336M0608PC
	47	6.3X10.5	0.12	500	55	780	HT1H476M0610PC
	100	8X13.5	0.12	1000	48	850	HT1H107M0813PC
	150	8X16	0.12	1500	45	950	HT1H157M0816PC
	220	10X16	0.12	2200	38	1250	HT1H227M1016PC
63V	5.6	6.3X5.5	0.12	300	58	450	HT1J565M0605PC
	10	6.3X8	0.12	300	55	550	HT1J106M0608PC
	22	6.3X8	0.12	300	48	650	HT1J226M0608PC
	47	8X11.5	0.12	592.2	38	800	HT1J476M0811PC
	100	10X12	0.12	1260	38	900	HT1J107M1012PC
	150	10X16	0.12	1890	32	1050	HT1J157M1016PC
	180	10X12	0.12	2268	32	1150	HT1J187M1012PC

索引 Index	
1>	物料编码 material code.
2>	电容引脚加工方式 Capacitor Lead Processing
3>	印字 Marking
4>	产品结构图 Product Structure Diagram
5>	产品尺寸 Product Size
6>	产品特性 Characteristics
7>	高温负荷寿命试验 High temperature load life test
8>	浪涌电压试验 Surge voltage test
9>	稳态湿热试验 Damp heat(steady state)
10>	温度特性试验 Characteristics at high and low temperature
11>	快速变温试验 Rapid change of temperature
12>	端子强度试验 Lead strength test
13>	振动试验 Vibration test
14>	可焊性试验 Weldability test
15>	焊锡耐热试验 Solder Heat Resistance Test
16>	包装数量 Packing quantity
17>	使用安装注意事项 Precautions for use and installation
18>	环保 Environmental protection

1> 物料编码 material code

HT 0J 337 M 0608 PC

- 其他编码 Form coding（1.7）
- 成型方式编码 Form coding(1.6)
- 尺寸编码 Size code(1.5)
- 电容公差编码 Capacitance tolerance Code (1.4)
- 电容量编码 Capacitance Code(1.3)
- 电压编码 Voltage Code(1.2)
- 系列编码 Category Code(1.1)

1.1 系列编码 Series Code

编码 Code	HT
系列编码 Series Code	HT

1.2 电压编码 Voltage Code

编码 Code	0E	0J	0Q	1A	1C	1E	1V	1H	1J
电压编码 VoltageCode(W.V)	2.5	6.3	7.5	10	16	25	35	50	63

1.3 电容量编码 Capacitance Code

编码 Code	476	107	227	337	477	567	687	827	108
电容量 Capacitance (uF)	47	100	220	330	470	560	680	820	1000

1.4 电容公差编码 Capacitance tolerance coding

“M”代表-20%～+20% “ M” stands for -20%～+20%

1.5 尺寸编码 Size code

编码 Code	5*7	5*8	5*9	5*11	5*15	5*7	5*9	5*11	5*15	6*5	6*7
直径 D (Φ)	5	5	5	5	5	5.5	5.5	5.5	5.5	6.3	6.3
高度 H (mm)	7	8	9	11.5	15	7	9	11.5	15	5.5	7

编码 Code	6*8	6*9	6*10	6*11	6*15	8*7	8*8	8*11	8*16	10*10	10*12
直径 D (Φ)	6.3	6.3	6.3	6.3	6.3	8	8	8	8	10	10
高度 H (mm)	8	9	10.5	11.5	15	7	8	11.5	16	10	12

1.6 成型方式编码 Form coding

编码 Code	PC	PJ	PB	PZ
其他 Other	平豆散装 Platform rubber& In bulk	平豆剪脚 Platform rubber &Lead Cut3.5±0.3mm	平豆编带 Platform rubber& Taping Pitch=2.5mm	座板 Right lying Bending 2.2±0.5mm

1.7 其他编码 Form coding

2> 电容引脚加工方式 Capacitor Lead Processing

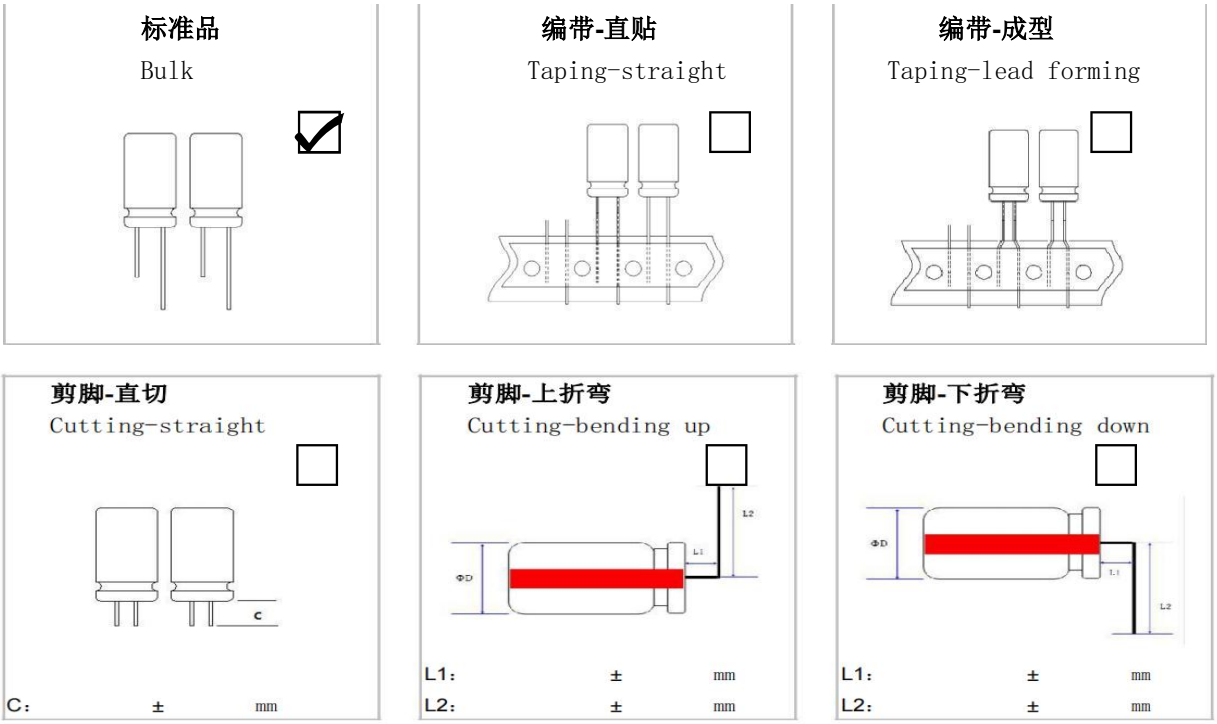

3> 印字 Markin

4> 产品结构图 Product Structure Diagram

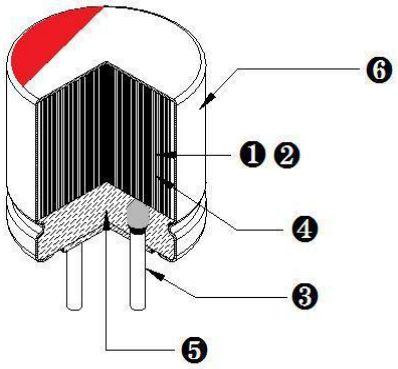

❶ **阳极箔：高纯铝化成箔**
Anode foil: high pure aluminum formation foil

❷ **阴极箔：高纯铝碳箔**
Cathode foil: high pure aluminum carbon foil

❸ **导针：高纯铝，引线为镀锡铜包钢线**
leader pin: high pure aluminum,lead is tin copper clad steel wire

❹ **电解纸：马尼拉麻**
Electrolytic paper: Manila hemp

❺ **胶盖：橡胶**
Sealing: rubber

❻ **铝壳：高纯铝，涂层铝壳**
Aluminum can: high purity aluminum, coated aluminum can

5> 产品尺寸 Product Size

◆尺寸图［mm］

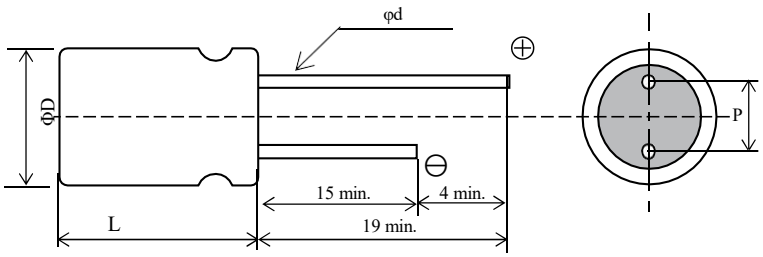

Π	5.0	5.5	6.3	8.0	10.0
P	2.0	2.5	2.5	3.5	5.0
Φd	0.5	0.5	0.5/0.6	0.6	0.6
ΦD	ΦD±0.5				
L	L±1.0				

单位：mm

6> 产品特性 Characteristics

1.标准测试条件

Standard test conditions

除非另有规定，所有测试环境应当在以下条件下进行：

Unless otherwise specified,all tests shall be performed at following conditions:

环境温度： 15-35 ℃

Ambient temperature: 15-35 ℃

相对湿度： 45-75% RH

Relative humidity: 45-75% RH

气压： 86-106 Kpa

Air pressure 86-106 Kpa

测试疑虑时，在以下条件下确认测量结果：

Any testing doubt, confirm the measurement results under the following conditions:

环境温度： 20±2 ℃

Ambient temperature: 20±2 ℃

相对湿度： 60-70% RH

Relative humidity: 60-70% RH

气压： 86-106 Kpa

Air pressure 86-106 Kpa

3.特性参数说明 Description

NO.	特性 Characteristics	单位 unit	说明 Description
1	容量 capacitance	uF	**产品标称容量，测试频率：120HZ，在规定容量公差内** Product nominal capacity, test frequency: 120HZ, within the specified capacity tolerance
2	电压 working voltage	V	**产品额定电压** Rated working voltage
3	损失角 Dissipation Factor	%	**也称损耗，测试频率：120HZ** Also calls dissipation, test frequency: 120HZ
4	阻抗 ESR Impedance	mΩ	**等效串联电阻，测试频率 100KHZ** Equivalent series resistance, test frequency 100KHZ
5	纹波电流 RC Ripple Current	mA rms	**最大许可纹波电流为 100KHZ 下最大 A.C 电流** The maximum allowable ripple current is 100KHZ, the largest A.C current
			DC 电压和峰值 AC 电压总和不可超出额定电压，不可反向充电 The DC voltage plus the peak AC voltage must not exceed the rated voltage,and non-reverse charging

频率 HZ Frequency	120≤f<1k	1K≤f<10K	10K≤f<100K	100K≤f<500K
系数 coefficient	0.05	0.3	0.7	1

6	漏电流 LC Leak Current	uA	**泄漏电流，产品施加额定电压，充电 2 分钟后测试漏电值** Leakage current, after charging for 2 minutes, test the leakage current value of product
			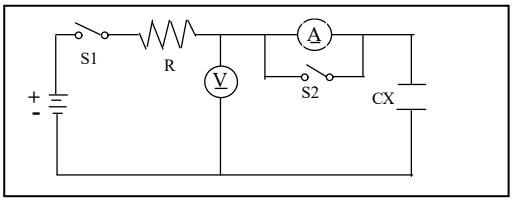
7	外形尺寸 Φ DXL Dimensions	mm	产品外径、高度 Diameter、Height

4.特性测试注意事项 Precautions before testing characteristics

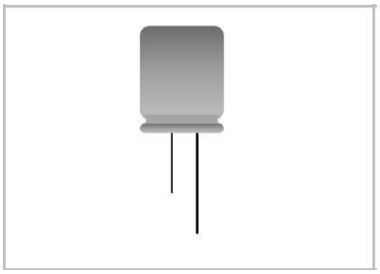

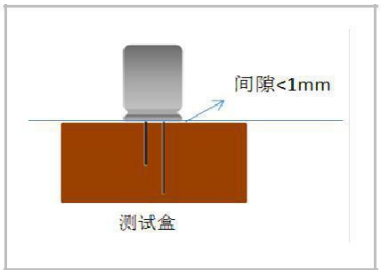

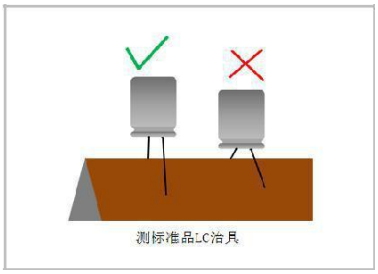

测试前保持引脚垂直平行不能扭动、拉扯电容引脚

Keep the pin perpendicular and parallel before testing. Do not twist or pull the capacitor pin

测试容量/损失角/ESR 值时，测试点需在引线根部

When testing the capacity/loss Angle /ESR value, the test point must be at the root of the lead

测试 LC 时，需保持引脚平行不能让电容引脚呈八字形分开

When testing LC, keep pins parallel,and can not separate two pins as "八"shape

7> 高温负荷寿命试验 High temperature load life test

电容器在额定最高温度下施加额定电压，持续储存至规定寿命时间后，符合以下要求：

The capacitor applies the rated voltage at the rated maximum temperature and is continuously stored to the specified life time, meeting the following requirements:

项目 item	要求 requirements
寿命时间 life time	2000 ±48 小时 hours
容量变化 change of capacitance	在容量初始值±20%内 Within ±20% of the initial value
损失角 dissipation factor	不超过规定值的 1.5 倍 Not to exceed 150% of the value specified
ESR	不超过规定值的 1.5 倍 Not to exceed 150% of the value specified
LC	不超过规定值 Not to exceed the value specified

8> 浪涌电压试验 Surge voltage test

在任何情况下，浪涌直流电压是电容器所应承受的最大电压，这包括瞬变和峰值纹波最高的线路电压。

The surge DC rating is the maximum voltage to which the capacitor should be subjected under any conditions. This includes transients and peak ripple at the highest line voltage.

额定电压（V） rated working voltage	额定温度（℃） upper temperature	浪涌电压（V） surge voltage
2.5	125	2.9
6.3	125	7.2
10	125	11.5
16	125	18.4
25	125	28.8
35	125	40.3
50	125	57.5
63	125	72.5

浪涌电压=1.15*额定电压

在常温条件下，电容串联 1000Ω电阻后，应用浪涌直流电压进行测试。
充电 30±5 秒，放电 5±0.5 分钟，充电放电过程重复 1000 次，符合以下要求：

At room temperature, after the capacitor is connected to 1000Ω resistor, the surge DC voltage is used for testing. Charge 30±5 seconds, discharge 5±0.5 minutes, the charging and discharge process is repeated 1000 times, meeting the following requirements:

项目 item	要求 requirements
容量变化 change of capacitance	在容量初始值±20%内 Within ±20% of the initial value
损失角 dissipation factor	不超过规定值的 1.5 倍 Not to exceed 150% of the value specified
ESR	不超过规定值的 1.5 倍 Not to exceed 150% of the value specified
LC	不超过规定值 Not to exceed the value specified

9> 稳态湿热试验 Damp heat(steady state) test
于环境温度 60±2℃，湿度 90-95% RH 条件下，储存 1000±48 小时，符合以下要求：
The following requirements shall be satisfied after the capacitors are stored at 60±2℃,90 to 95%RH for 1000±48 hours

项目 item	要求 requirements
容量变化 change of capacitance	在容量初始值±20%内 Within ±20% of the initial value
损失角 dissipation factor	不超过规定值的 1.5 倍 Not to exceed 150% of the value specified
ESR	不超过规定值的 1.5 倍 Not to exceed 150% of the value specified
LC	不超过规定值 Not to exceed the value specified

10> 温度特性试验 characteristics at High and low Temperature
于以下环境步骤按规定时间储存，符合以下要求：
The following requirements shall be satisfied after the capacitors are stored at following conditions and specified time

步骤 Step	温度 Temperature	存储时间 Storage Time	测试项目 Test item	要求 requirements
1	20℃±2℃	30minutes	电容量 Capacitance 损耗角正切 Tangent of loss angle ESR	不超过规定值 Not to exceed the value specified
2	-55℃±3℃	2 hours	ESR	Z(-55℃)/Z(20℃)≤2.5
3	125℃±3℃	2 hours	LC	LC(125℃)/LC(SPEC)≤12.5 LC(SPEC):初始规定值 LC(SPEC): indicates the initial specified value
			ESR	Z(+125℃)/Z(20℃)≤1.25

11> 快速变温试验 Rapid change of temperature

	要求 requirement
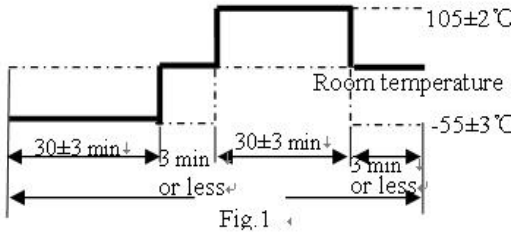 使用电压：无负荷 Applied voltage : without load 循环次数：5 次 Cycle number : 5 Cycles 测试图:Fig. 1 Test diagram: Fig. 1	容量变化在初始值±20%内 Within ±20% of the initial value
	损失角不超过规定值 Dissipation factor:not to exceed the value specified
	ESR 不超过规定值 ESR: not to exceed the value specified
	LC 不超过规定值 LC: not to exceed the value specified

12> 端子强度试验 Lead strength test

1. 引张强度 Tensile Strength

电容器引脚向下，固定电容器本体，在引脚上静态负重至规定时间，符合以下要求：

Fixing capacitor body and pins down,static load on the pins to the specified time,meets the following requirements

电容器引线直径 mm diameter of pin	负重（N） weight	负重时间（秒） load time	要求 requirement
d≤0.5	5	**10±1**	端子无断裂、松动 pins have no broken and loose
0.5<d≤0.8	10	**10±1**	端子无断裂、松动 pins have no broken and loose
0.8<d≤1.2	25	**10±1**	端子无断裂、松动 pins have no broken and loose
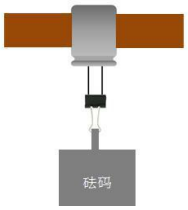			

2. 折曲强度 Bending strength

电容器引脚向下，固定电容器本体，在引脚上负重，按图示折弯，试验两回。

Fixing capacitor body and pins down,load on the pins and bending for 2 times according to following diagram, then meets requirements as below:

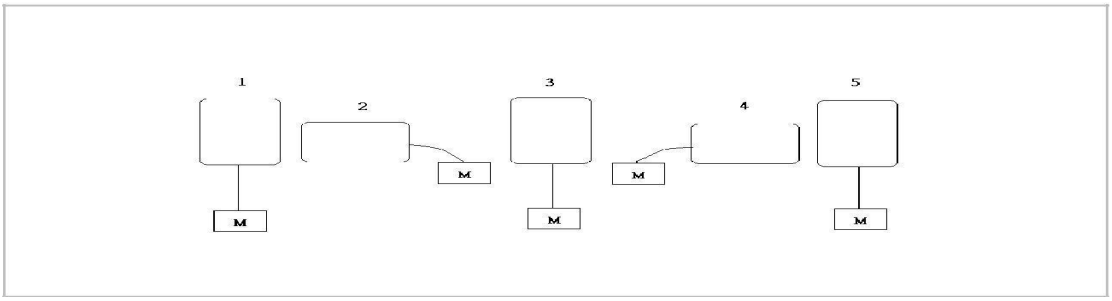

电容器引线直径 mm diameter of pin	负重（N） weight	回数 cycle	要求 requirement
d≤0.5	2.5	2	端子无断裂、松动 pins have no broken and loose
0.5<d≤0.8	5	2	端子无断裂、松动 pins have no broken and loose
0.8<d≤1.2	10	2	端子无断裂、松动 pins have no broken and loose

13> 振动试验 Vibration test

振动频率： 10-55HZ （间隔 1 分钟 / 10HZ-->55HZ-->10HZ）

Vibration frequency： 10-55HZ （Spaced one minute apart/ 10HZ-->55HZ-->10HZ） 振幅： 0.75mm （总偏移 1.5mm）

Amplitude：0.75mm （total migration 1.5mm）

方向： X、Y、Z （3 向）

Direction: X、Y、Z axis(three directions)

持续时间： 2 小时/向

Duration: 2 hours/direction

安装图示如下：

Installation diagram as below:

30 分钟内，容量值相比初始值不应有明显变化

Within 30 minutes,capacitance has no significant change comparation with initial value

项目 item	要求 requirement
容量变化 change of capacitance	在容量初始值±5%内 Within ±5% of the initial value
外观 appearance	端子无断裂、松动 pins have no broken and loose

14> 可焊性试验 Solderability test

焊料： 约 25%松香/乙醇溶液，焊料 Sn-Ag-Cu

Solder: about 25% rosin/ethanol solution, solder Sn - Ag - Cu

温度： 245±5℃

Temperature: 245±5℃

时间： 2±0.5 秒

Time: 2±0.5 seconds

试验后端子浸渍位置至少 95%面积包盖了新锡。

After testing, more than 95% of the terminal surface shall be covered with new solder

15>焊锡耐热试验
Solder Heat Resistance Test

1.焊锡槽法 Tin groove method:

温度：260±5℃ 时间：10±1 秒

Temperature: 260±5℃ Time: 10±1 seconds

2.烙铁焊接方法 Soldering iron welding method:

温度：400±10℃ 时间：3+1/-0 秒

Temperature: 400±10℃ Time: 3+1/-0 seconds

以上两种方法，在电容器热量趋于稳定后，符合以下要求：

For above two methods, after the capacitor heat is stabilized, the following requirements should be met

项目 item	要求 requirement
容量变化 change of capacitance	在容量初始值±5%内 Within ±5% of the initial value
损失角 dissipation factor	不超过规定值 Not to exceed the value specified
ESR	不超过规定值 Not to exceed the value specified
LC	不超过规定值 Not to exceed the value specified

16>包装数量 Packing quantity

包装标签标示 Packing Label Marked

(下面的项目应该标志在标签上 the following items shall be marked on the label) (盒内或包内 Inside box or bag)

1)系列 series 2)料号 P/N 3)额定电容 Rated capacitance 4)额定电压 Rated Voltage

5)数量 quantity 6)尺寸 size

7)批号 LOT Number ：

1	-	2 3	4 5	6 7 8 9
成品 Product		年 year	月 month	号码 number

分类		标准品			剪脚品		
尺寸		袋	内盒	外箱	袋	内盒	外箱
D (mm)	L(mm)	(pcs)	267x260x135 (mm)	546x279x160 (mm)	(pcs)	267x260x135 (mm)	546x279x160 (mm)
5	7	1000	10000	20000	1000	12000	24000
5	8	1000	10000	20000	1000	12000	24000
5	9	1000	10000	20000	1000	12000	24000
5	11.5	1000	10000	20000	1000	12000	24000
5	15	1000	10000	20000	1000	12000	24000
5.5	7	1000	10000	20000	1000	12000	24000
5.5	9	1000	10000	20000	1000	12000	24000
5.5	11.5	1000	10000	20000	1000	12000	24000
5.5	15	1000	10000	20000	1000	12000	24000
6.3	5.5	1000	10000	20000	1000	12000	24000
6.3	7	1000	10000	20000	1000	12000	24000
6.3	8	1000	10000	20000	1000	12000	24000

分类		标准品			剪脚品		
尺寸		袋	内盒	外箱	袋	内盒	外箱
D (mm)	L(mm)	(pcs)	267x260x135 (mm)	546x279x160 (mm)	(pcs)	267x260x135 (mm)	546x279x160 (mm)
6.3	9	1000	10000	20000	1000	12000	24000
6.3	11.5	1000	10000	20000	1000	12000	24000
6.3	15	1000	10000	20000	1000	12000	24000
8	7	1000	10000	20000	1000	12000	24000
8	8	1000	10000	20000	1000	12000	24000
8	11.5	500	5000	10000	1000	6000	12000
8	16	500	5000	10000	500	6000	12000
10	10	500	5000	10000	1000	6000	12000
10	12	500	5000	10000	500	6000	12000
10	16	400	4000	4000	500	4000	8000

17>使用安装注意事项 Precautions for use and installation

固体铝电解电容器具有不同于一般电解液作为阴极的铝电解电容器 ，为使导电性高分子铝电解电容器在电路中发挥其优越的性能，在使用中请特别注意以下内容。

Solid aluminum electrolytic capacitors are different from the general electrolyte as the cathode of aluminum electrolytic capacitors. In order to make conductive polymer aluminum electrolytic capacitors play their superior performance in the circuit, please pay special attention to the following contents in use.

1. 极性	1. Polarity
导电性高分子型固体铝电解电容器的引出端子有正负极之分。 在电路中使用切勿将正负极接反，否则将有导致电容器漏电流增加并将严重影响电容器的使用寿命。	The solid aluminum electrolytic capacitor with positive and negative electrodes. Do not reverse the polarity when using. If happened, increased leakage current or a decreased life span may result.
2. 不推荐使用的电路	2. Prohibited circuits
导电性高分子型固体铝电解电容器在电路使用中由于焊接等原因会导致漏电流增大，因此不推荐应用于以下电路。 a) 高阻抗电路 b) 耦合电路 c) 时间常数电路 d) 受漏电流影响较大的电路	Conductive polymer solid aluminum electrolytic capacitors in the circuit use due to welding and other reasons will lead to increased leakage current, so it is not recommended for use in the following circuits. a) High impedance circuits b) Coupling circuits c) Time constant circuits d) A circuit heavily affected by leakage current
3. 禁止在过电压状态下使用	3. Compliance with rated performance
导电性高分子型固体铝电解电容器必须在低于额定工作电压下使用。 瞬间的超过额定电压的过电压可能会导致电容器的短路。	The aluminum solid capacitor with conductive polymer must be used under the rated voltage. Over-voltage exceeding the rated voltage should not be applied since it may cause a short circuit.
4. 电容器焊接时的注意事项	4. Considerations when soldering
电容器的焊接条件请在本公司所规定的范围内进行。 强烈的焊接条件，可能会造成电容器电气性能的劣化甚至外观不良，严重时更会导致电容器漏电流的急剧增加和容量急剧下降。	The soldering conditions are to be within the range prescribed in specifications. If the specifications are not followed, there is a possibility of the cosmetic defection, the intensive increase of leakage current, and the capacitance reduction.
5. 线路板焊接时的注意事项	5. Things to be noted before mounting
导电性高分子型固体铝电解电容器的封口皮塞具有较好的密封效果，由于封口的原因皮塞可能会有一定程度的鼓起，电路设计时请考虑本公司规格书的 L 尺寸和引线的位置公差范围。	The aluminum solid capacitors with conductive polymer is sealed well, because of sealing the rubble may protrude, please conform to the dimensional tolerance stipulated in the specifications.

1. 电路设计的注意事项	1. Considerations when circuit design
(a) 额定电性能的使用确认	(a) Service confirmation of rated electrical properties
在电路设计前，请先确认电容器的使用及安装环境，请在本公司的技术手册或者规格书的规定条件范围内正确使用。	Before the circuit design, please confirm the use and installation environment of the capacitor, and please use it correctly within the range of conditions specified in the company's technical manual or specifications.
(b) 使用温度和纹波电流	(b) Use temperature and ripple current
使用温度请设定在规格书规定的范围之内。使用电容器过程中切勿施加超过额定纹波电流的电流。如有此现象的发生将会导致电容器内部急剧发热而严重缩短电容器的使用寿命。	The operating temperature should be set within the range specified in the specification. Do not apply more current than the rated ripple current when using the capacitor. If this phenomenon occurs, it will lead to acute heating inside the capacitor and seriously shorten the service life of the capacitor.
(c) 漏电流	(c) leakage current
对于高温无负荷、高温高湿无负荷及温度急剧变化等试验也会导致漏电流的增大。 这种情况下，在最高使用温度范围内施加额定使用电压，漏电流会有一定程度的降低。	Heat pressure from soldering and mechanical stress from transportation may cause the leakage current to become large. In such a case, leakage current will gradually decreased by applying voltage less than or to the rated voltage at a temperature within the upper category temperature.
(d) 电路设计时的施加电压	(d) The applied voltage at the time of circuit design
可以施加 100%的额定电压。请在直流电压与纹波电压的最大值不超过额定电压的范围内使用。直流电压偏低时，纹波电压的负的最大值不能超过额定电压的10%的反向电压。在切断电 源等造成的过渡现象中产生的反电压，应在额定电压的 20%以内使用。	100% of the rated voltage can be applied. Please use in the range where the maximum DC voltage and ripple voltage do not exceed the rated voltage. When the DC voltage is low, the maximum negative ripple voltage cannot exceed 10% of the rated voltage reverse voltage. The reverse voltage generated in the transition phenomenon caused by cutting off the power source should be used within 20% of the rated voltage.
(e) 电容器的绝缘性	(e) Insulation of capacitors
电容器的表面喷塑涂层不保证完全绝缘。使 用电容器时请将外壳、负极引线、正极引线与周 围组件之间的线路完全分开。	The sprayed coating on the surface of the capacitor does not guarantee complete insulation. When using the capacitor, completely separate the circuit between the housing, negative leads, positive leads and the perimeter assembly.
(f) 工作环境限制	(f) Working environment limitation
电容器在下列环境中禁止使用： (1)在有水、卤水、油的地方 (2)充满有害气体的地方，如硫化氢、亚硫酸、氯气、氨气等 (3)容易受臭氧氧化、紫外线及放射线辐射的地方	Capacitors are prohibited in the following environments: (1) where there is water, brine, oil (2) where there are harmful gases, such as hydrogen sulfide, sulfite, chlorine, ammonia, etc. (3) Areas susceptible to ozone oxidation, ultraviolet radiation and radiation
(g) 其它	(g) others
设计电路前请先确认以下内容： 电容器的电性能会受到温度和频率的影响，在设计前请先确认波动量。	Please confirm the following before designing the circuit: The electrical performance of the capacitor will be affected by temperature and frequency, please confirm the fluctuation before designing.
2. 安装注意事项	2. Installation precautions

(a) 安装前的注意事项	(a) Precautions before installation
使用过的电容器不能再使用。 长期保存的电容器其漏电流会有不同程度的升高，此情况下请通过 1kΩ的电阻进行施加额定电压处理。处理方法：在 60～70℃温度下施加额定电压1h。	Used capacitors cannot be used again. The leakage current of the capacitor stored for a long time will increase to varying degrees, in this case, please apply the rated voltage treatment through the resistance of 1kΩ. Treatment method: Apply the rated voltage for 1h at a temperature of 60 ~ 70℃.
(b) 安装时的注意事项	(b) Precautions during installation
安装时注意电容器的标称容量和额定电压，并确 认极性。 安装过程中切勿将电容器掉落地面，此电容器不能再使用，安装过程中防止电容器变形。 安装前请确认电容器的引线间距是否与线路板孔间隔吻合。	Pay attention to the nominal capacity and rated voltage of the capacitor when installing, and confirm the polarity. Do not drop the capacitor to the ground during installation. The capacitor cannot be used again. Prevent deformation of the capacitor during installation. Before installation, ensure that the lead spacing of the capacitor is consistent with the hole spacing of the circuit board.
(c) 电烙铁焊接	(c) Soldering with electric iron
焊接温度、时间等请保持在本公司规格书规定的范围内。 焊接时不要给电容器施加过度的应力，通电的电烙铁不要触及电容器本身。 焊接后电容器的漏电流因焊接预热条件 、焊接温度、时间、线路板的材质及材质不同而发生很大的变化，几十甚至几百微安，但是在施加额定电压后处于稳定状态时电容器由于自愈能力而会使其漏电流逐渐减小。	Welding temperature, time, etc. should be kept within the range specified in the company's specifications. Do not apply excessive stress to the capacitor when welding, and do not touch the capacitor itself with the energized electric soldering iron. After welding, the leakage current of the capacitor changes greatly due to the welding preheating conditions, welding temperature, time, the material and material of the circuit board, tens or even hundreds of microamps, but when the rated electrical voltage is applied in a stable state, the capacitor will gradually reduce its leakage current due to its self-healing ability.
(d) 焊接后注意事项	(d) Precautions after welding
电容器焊接在线路板后，请不要施加外力。禁止将电容器倾斜、弯折、扭曲。	After the capacitor is welded to the circuit board, do not apply external force. Do not tilt, bend or twist the capacitor.
3. 电容器在设备中安装时的注意事项	3. Precautions with completed board
(1)安装过程中切勿直接接触电容器的引线端子 。 (2)禁止将电容器的正负极之间用导线短路 ，不要将导电性的酸性或碱性溶液洒落在电容器表面。 (3)安装前确认电容器在设备中的安装环境。 (4)设备的试验温度要在电容器的额定范围内使用。	(1) Do not directly touch the lead terminal of the capacitor during installation. (2) It is forbidden to use a wire short circuit between the positive and negative electrodes of the capacitor, and do not sprinkle the conductive acid or alkaline solution on the surface of the capacitor. (3) Confirm the installation environment of the capacitor in the equipment before installation. (4) The test temperature of the equipment should be made within the rated range of the capacitor
4. 意外情况的处理	4.Handling of unexpected situations

导电性高分子型固体铝电解电容器组成材料包括电解质、电解纸、皮塞和套管属于可燃性物质，电容器短路后电流值急剧增加，导致引线端子和电容器内部短路部分会产生电火花，情况严重时会引起皮塞和套管燃烧，所以在电路设计中应对电容器的安装方法和安装位置谨慎对待。	The conductive polymer solid aluminum electrolytic capacitor consists of electrolytes, electrolytic paper, plugs and bushings, which are inflammable substances. After the capacitor is short-circuited, the current value increases sharply, resulting in electrical sparks generated by the lead terminals and the internal short-circuited part of the capacitor. In serious cases, the plugs and bushings will burn. Therefore, in the circuit design, the installation method and installation position of the capacitor should be carefully treated
5. 电容器的保管条件	5. Storage conditions of capacitors
(1)导电性高分子型固体铝电解电容器的保存要避免高温、高湿的环境，并避免阳光直射。 常温常湿(一般情况温度为 35℃以下，湿度保持在 75%RH 以下) (2)为保持电容器具有良好的可焊性，应在产品出厂状态下(塑料袋包装) 保管。 为防止吸潮而导致焊接性劣化，产品出厂时密封在专用的包装袋内。 (3)为保持良好的焊接性，引线式产品保管期限为(购入后) 一年，SMD 型的保管期限为(购入后) 一年，SMD 型产品打开包装后，需在 4 周内使用完。 (4)使用时，应在即刻安装前开封，开封后尽量全 部用完。出现剩余时，散装产品重新放入原包装袋内，并用胶带封好开口部分。 (5)不要将电容器直接保管在有水、卤素及有油等有机物的环境中。 (6)不要将电容器保存在充满有害气体的环境中，如硫化氢、亚硫酸、氯气、氨气等。 (7)不要将电容器保存在易受臭氧氧化、紫外线及放射线辐射的环境中。	(1) The storage of conductive polymer solid aluminum electrolytic capacitors should avoid high temperature and high humidity environment, and avoid direct sunlight. Normal temperature and humidity (generally, the temperature is below 35 ° C, and the humidity is kept below 75%RH) (2) In order to maintain the good weldability of the capacitor, it should be kept in the factory state of the product (plastic bag packaging). In order to prevent weldability deterioration caused by moisture absorption, the product is sealed in a special packaging bag when leaving the factory. (3) In order to maintain good weldability, the storage period of lead type products is one year (after purchase), and the storage period of SMD type products is one year (after purchase), and SMD type products should be used within 4 weeks after opening the packaging. (4) When used, it should be opened before immediate installation, and used up as much as possible after opening. When there is surplus, the bulk product is put back into the original packaging bag, and the open part is sealed with tape. (5) Do not store capacitors directly in an environment with organic matter such as water, halogen and oil. (6) Do not store the capacitor in an environment full of harmful gases, such as hydrogen sulfide, sulfite, chlorine, ammonia, etc. (7) Do not store the capacitor in an environment susceptible to ozone oxidation, ultraviolet and radioactive radiation.

18>环保　Environmental protection

本公司每年一次，将电容主要材料及电容成品送第三方权威检测机构检测。

Once a year, the company will send the main materials and finished capacitors to third-party authoritative testing institutions for testing.

检测时，根据当年欧盟最新要求检测 **ROHS**、**SVHC** 管理物质。

At the time of testing, ROHS and SVHC management substances were tested according to the latest requirements of the European Union that year.

检测报告，本公司会在检测完成后上发给客户 。

The test report will be sent to the customer after the test is completed

为倡导环保，节能减排，本公司一律提供 **pdf** 电子档承认书给客户。

In order to advocate environmental protection, energy saving and emission reduction, the company will provide pdf electronic documents to customers.

有特殊要求，请再联络本公司业务人员，谢谢！

For special requirements, please contact our business personnel. Thanks!