REV.	ECN NO.	DESCRIPTION	DATE	DESIGN

Process Capable

RoHS Compliant 2011/65/EU

Compliant Halogen Free

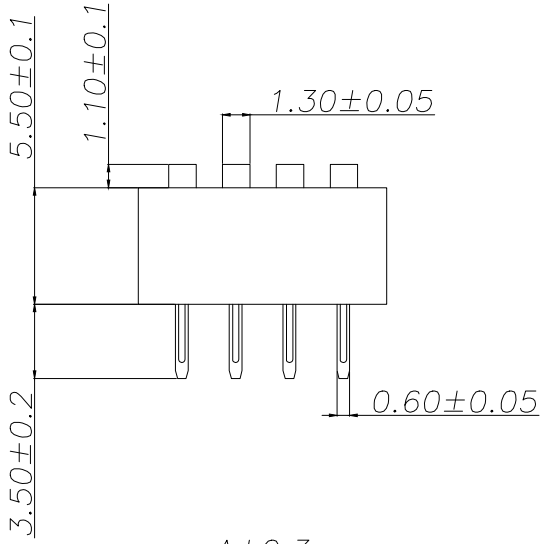

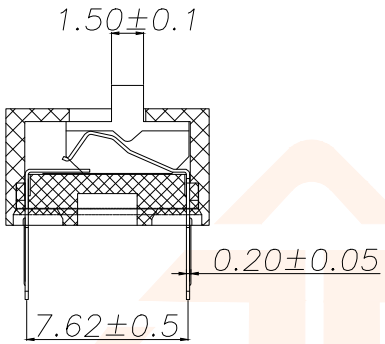

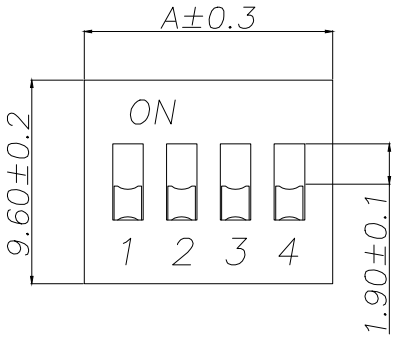

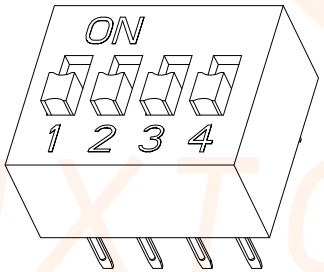

位数	A
1	3.54
2	6.64
3	9.18
4	11.72
5	14.26
6	16.80
7	19.34
8	21.88
9	24.42
10	26.96
12	32.04

NOTES:

1.MECHANICAL:

1>.Operation force: 1000gf Max.

2>.Operation Temperature: −30℃ to +85℃.

3>.Storage Temperature: −40℃ to +85℃.

4>.Mechanical Life: 3000 cycles operations.

5>.Resistance to Soldering: 260±5℃ for 3−5 Seconds.

6>.Please keep switch in "OFF" when welding.

2.MATERIAL:

1>.Base: UL94V−0 PBT Thermoplastic / Color:Black.

2>.COVER: UL94V−0 PBT Thermoplastic / Color:Red, Black, Blue.

3>.ACTUATOR: UL94V−0 PBT High Thermoplastic / Color: White.

4>.TERMINAL: Copper alloy with gold plating for1.5u".

3.ELECTRICAL:

1>.Non−switching Rating:100mA at 50VDC.

2>.Switching Rating: 25mA at 24VDC.

3>.Contact Resistance: Inital 50mΩ Max.
Contact Resistance: After life 100mΩ Max.

4>.Insulation Resistance:100MΩ Min at 500VDC.

5>.Dielectric Strength: 500VAC for 60seconds.

6>.Switch Capacitance: 5PF Max at 1MHZ.

4.PART NUMBER DESCRIPTION:

DSE−X−X−GA

(外壳颜色: R=红色/B=蓝色/K=黑色)

(开关位数:1位−−−−−12位)

5.PACKING: 121pcs/Tube, 6050pcs/Box.

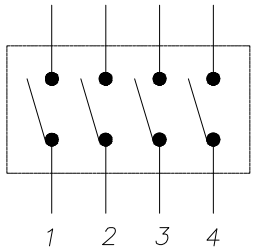

电路图

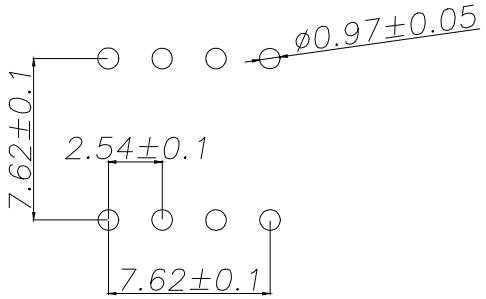

PCB开孔

TOLERANCE		深圳聚兴泰电子科技有限公司 Shenzhen Juxingtai Electronic Technology Co., Ltd		
>0±0.05	>0°±0.5°	PART NO. DSEXXGA	TITLE:PRODUCT Family DS Series Pitch 2.54mm	
>1±0.10	>5°±1.0°			
>10±0.30				
UNITS	mm	DESIGN: Ethan	MANUFACTURE DWG	
MATERILA	— — —	CHED: Olvia	SCALE	SHEET
FINISH	— — —	APPD: Ava	N:A	1/1

JXTCONN