Data Sheet

Customer:	
Product:	Automotive Grade Metal Film Precision MELF Resistor - CSRA Series
Size:	0102/0204/0207
Issued Date:	05-Sep-23
Edition:	REV.A9

VIKING TECH CORPORATION
光頡科技股份有限公司
No.70 Guangfu N. Rd., Hukou Township, Hsinchu County 303, Taiwan

TEL:886-3-5972931
FAX:886-3-5972935•886-3-5973494
E-mail:sales@viking.com.tw

VIKING TECH CORPORATION KAOHSIUNG BRANCH
光頡科技股份有限公司高雄分公司
No.248-3, Sin-Sheng Rd., Cian-Jhen Dist., Kaohsiung, 806, Taiwan

TEL:886-7-8217999
FAX:886-7-8228229
E-mail:sales@viking.com.tw

VIKING ELECTRONICS (WUXI) CO., LTD.
光頡電子(無錫)有限公司
No.22 Xixia Road, Machinery & Industry Park, National Hi-Tech Industrial Development Zone of Wuxi, Wuxi, Jiangsu Province, China
Zip Code:214028
TEL:86-510-85203339
FAX:86-510-85203667•86-510-85203977
E-mail:china@viking.com.tw

Produced by (QC)	Checked (QC)	Approved by (QC)	Prepared by (Sales)	Accepted by (Customer)
05-Sep-23	05-Sep-23	05-Sep-23		
Alice Hsiao	***Susan Huang***	***Susan Huang***		

Automotive Grade Metal Film Precision MELF Resistor

■Features

- Thin film technology
- AEC-Q200 Compliance
- Excellent overall stability
- Sn termination on Ni barrier layer
- Tight tolerance down to ±0.1%
- Extremely low TCR down to ±5 ppm/℃
- High power rating up to 1 Watts
- SMD enabled structure
- Lead-free and RoHS compliant

■Applications

- Automotive
- Industrial
- Telecommunication
- Medical Equipment
- Measurement/Testing Equipment

TECHNICAL SPECIFICATIONS						
DESCRIPTION	CSRA0102		CSRA0204		CSRA0207	
Resistance range	1Ω-1MΩ; 0Ω		0.1Ω-10MΩ; 0Ω		0.1Ω-10MΩ; 0Ω	
Resistance tolerance	±5%;±1%;±0.5%;±0.25%;±0.1%					
Temperature coefficient	±100ppm/℃; ±50ppm/℃; ±25ppm/℃; ±15ppm/℃		±100ppm/℃; ±50ppm/℃; ±25ppm/℃; ±15ppm/℃; ±10ppm/℃; ±5ppm/℃			
Operation mode	Standard	High power	Standard	High power	Standard	High power
Power rating P_{70}	1/5W	0.3W	1/4W	2/5W	1/2W	1W
Operating voltage $U_{max.}$	200V	200V	200V	200V	300V	350V
Operating temperature range	-55℃~155℃					
Max. resistance change at P70 for resistance range, ΔR/R max., after 1000 h	≦0.5%		≦0.5%		≦0.5%	

■Construction & Dimension

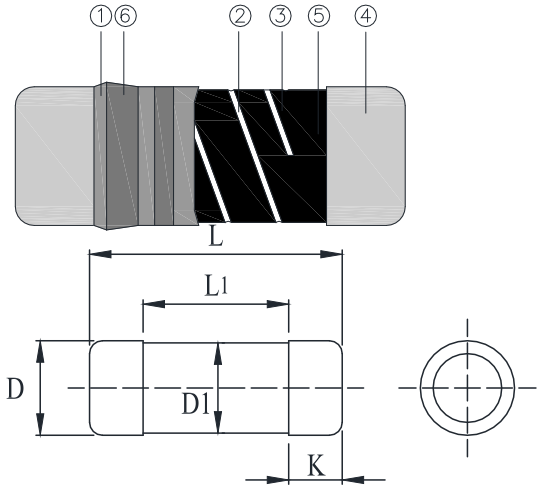

①	Insulation Coating	④	Electrode Cap
②	Trimming Line	⑤	Resistor Layer
③	Ceramic Rod	⑥	Marking

Type	L (mm)	$L_{1\ min.}$ (mm)	ΦD (mm)	$ΦD_1$ (mm)	K (mm)	Weight 1,000EA (g)
CSRA0102	2.20±0.10	1.1	1.10±0.10	D +0/-0.15	0.45±0.05	7.7
CSRA0204	3.50±0.2	1.7	1.40±0.15	D +0/-0.2	0.8±0.1	18.7
CSRA0207	5.90±0.2	2.9	2.20±0.20	D +0/-0.2	1.3±0.1	80.9

■Part Numbering

Part Number：CSRA0204DTDV1001
Part Number：CSRA0204JT-VR0R0

C	S	R	A	0	2	0	4	D	T	D	V	1	0	0	1
C	S	R	A	0	2	0	4	J	T	–	V	R	0	R	0

Product Type	Dimensions (L×ΦD)	Resistance Tolerance	Packaging Code	TCR (PPM/℃)	Power Rating	Resistance
CSRA	0102: 2.2x1.1 0204: 3.5x1.4 0207: 5.9x2.2	B: ±0.1% C: ±0.25% D: ±0.5% F: ±1% J: ±5% or Jumper	T: 7" Taping Reel S:7" Taping Reel, **Antistatic Tape** W:13" Taping Reel M:13" Taping Reel, **Antistatic Tape**	S: ±5 B: ±10 N: ±15 C: ±25 D: ±50 E: ±100 -: Jumper	T: 1W U: 1/2W V: 1/4W G: 2/5W P: 1/5W L: 0.3W	0010: 1Ω 0100: 10Ω 2201: 2200Ω 1001: 1KΩ 1004: 1MΩ R050: 0.05Ω 22R1: 22.1Ω R0R0: 0Ω

※Packaging Code "S" & "M" only for 0102 & 0204 size products, not include 0207 size product.

■Recommend Land Pattern

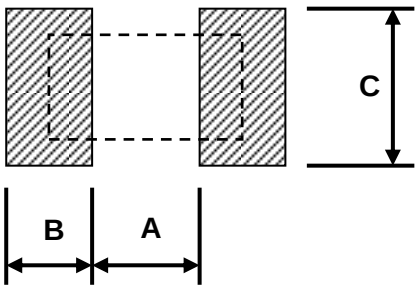

Type	A (mm)	B (mm)	C (mm)
CSRA0102	1.0	0.8	1.5
CSRA0204	1.6	1.2	1.6
CSRA0207	3.0	1.7	2.4

■Derating Curve

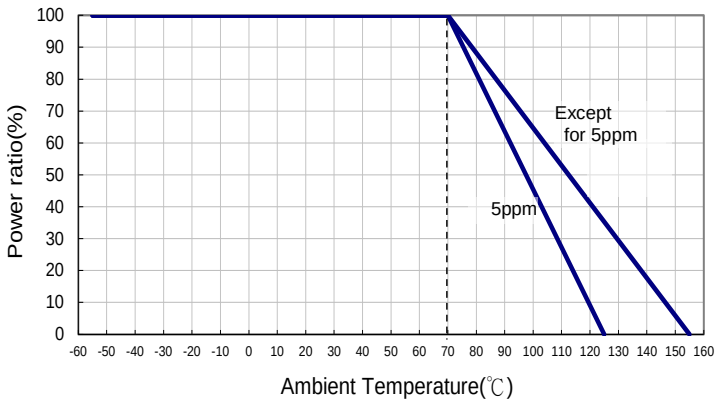

■Soldering Condition (Ref. IPC/JEDEC J-STD-020 & J-STD-002)

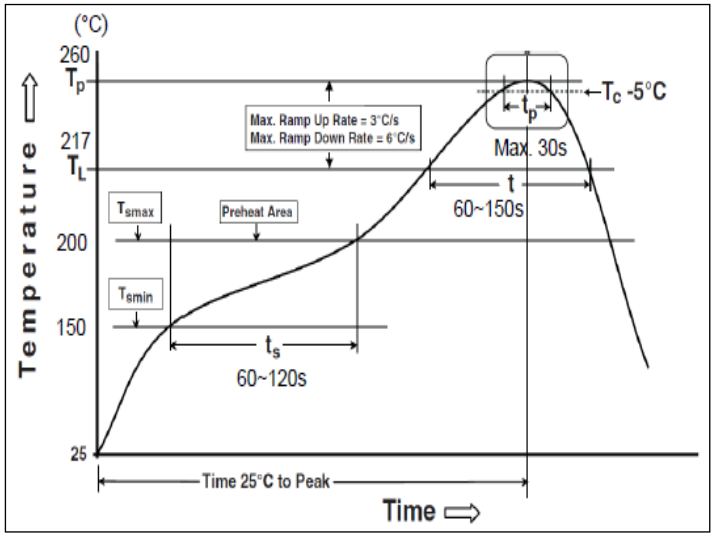

Reflow Profiles	
Profile Feature	**Pb-Free Assembly**
Preheat Min. Temperature (Tsmin) Max Temperature (Tsmax) Preheating time (ts) from (Tsmin to Tsmax)	 150 °C 200 °C 60-120 seconds
Ramp-up rate (T_L to Tp)	3 °C/second max.
Liquidous temperature (T_L) Time (t_L) maintained above T_L	217 °C 60-150 seconds
Min. Peak temperature (Tp min)	235°C
Max. Peak temperature (Tp max)	260°C
Time (tp) within 5 °C of the specified classification temperature (Tc)	30 seconds max.
Ramp-down rate (Tp to T_L)	6 °C/second max.
Time 25 °C to peak temperature	8 minutes max.

■Standard Electrical Specifications

Item / Type	Power Rating at 70˚C	Operating Temp. Range	Max. Operating Voltage	Max. Overload Voltage	Resistance Range ±0.1%	±0.25%	±0.5%	±1%	±5%	TCR (PPM/˚C)
0102	1/5W	-55 ~ +155°C	200V	400V	100Ω-56KΩ				-	±15
					100Ω-82KΩ		49.9Ω-200KΩ	49.9Ω-390KΩ	-	±25
					-		1Ω-1MΩ			±50
					-			1Ω-1MΩ		±100
0204	1/4W	-55 ~ +125°C	200V	400V	10Ω-332KΩ		-			±5
		-55 ~ +155°C	200V	400V	10Ω-332KΩ				-	±10
					10Ω-332KΩ				-	±15
					10Ω-1MΩ		10Ω-3.4MΩ	1Ω-3.4MΩ		±25
					10Ω-1MΩ		1Ω-3.4MΩ	0.2Ω-10MΩ		±50
					-			0.1Ω-10MΩ		±100
0207	1/2W	-55 ~ +125°C	300V	600V	10Ω-332KΩ		-			±5
		-55 ~ +155°C	300V	600V	10Ω-332KΩ				-	±10
					10Ω-332KΩ				-	±15
					10Ω-1MΩ		10Ω-3.4MΩ	1Ω-3.4MΩ		±25
					10Ω-1MΩ		1Ω-3.4MΩ	0.2Ω-10MΩ		±50
					-			0.1Ω-10MΩ		±100

■High Power Rating Electrical Specifications

Item / Type	Power Rating at 70˚C	Operating Temp. Range	Max. Operating Voltage	Max. Overload Voltage	Resistance Range ±0.1%	±0.25%	±0.5%	±1%	±5%	TCR (PPM/˚C)
0102	0.3W	-55 ~ +155°C	200V	400V	100Ω-56KΩ				-	±15
					100Ω-82KΩ		49.9Ω-200KΩ	49.9Ω-390KΩ	-	±25
					-		1Ω-1MΩ			±50
					-			1Ω-1MΩ		±100
0204	2/5W	-55 ~ +125°C	200V	400V	10Ω-332KΩ		-			±5
		-55 ~ +155°C	200V	400V	10Ω-332KΩ				-	±10
					10Ω-332KΩ				-	±15
					10Ω-1MΩ		10Ω-3.4MΩ	1Ω-3.4MΩ		±25
					10Ω-1MΩ		1Ω –3.4MΩ	0.2Ω-10MΩ		±50
					-			0.1Ω-10MΩ		±100
0207	1W	-55 ~ +125°C	350V	700V	10Ω-332KΩ		-			±5
		-55 ~ +155°C	350V	700V	10Ω-332KΩ				-	±10
					10Ω-332KΩ				-	±15
					10Ω-1MΩ		10Ω-3.4MΩ	1Ω-3.4MΩ		±25
					10Ω-1MΩ		1Ω-3.4MΩ	0.2Ω-10MΩ		±50
					-			0.1Ω-10MΩ		±100

Operating Voltage=$\sqrt{(P*R)}$ or Max. Operating Voltage listed above, whichever is lower.
Overload Voltage=2.5*$\sqrt{(P*R)}$ or Max. Overload Voltage listed above, whichever is lower.
RCWV(Rated Continuous Working Voltage)=$\sqrt{(P*R)}$ or Max. Operating Voltage whichever is lower.
■ Viking is capable of manufacturing the optional spec based on customer's requirement.

■Jumper Specifications

Item / Type	Power Rating	Operating Temp.Range	Resistance	Rated Current
CSRA0102	1/5W 0.3W	-55 ~ +155°C	0Ω(<15mΩ)	2A
CSRA0204	1/4W 2/5W	-55 ~ +155°C		3A
CSRA0207	1/2W 1W	-55 ~ +155°C		5A

■Environmental Characteristics

Item	Requirement		Test Method
	5% and Below	Jumper	
Temperature Coefficient of Resistance (T.C.R.)	As Spec		**JIS-C-5201-1 4.8** **IEC-60115-1 4.8** At 25°C/-55°C and 25°C/+125°C, 25°C is the reference temperature 5ppm: At 25°C/-10°C and 25°C/+85°C, 25°C is the reference temperature
Short Time Overload	10Ω-332KΩ: ±(0.1%+0.01Ω) <10Ω & >332KΩ: ±(0.15%+0.01Ω) 0102: ±(0.15%+0.01Ω) 5ppm: ±(0.05%+0.01Ω)	<15mΩ	**JIS-C-5201-1 4.13** **IEC-60115-1 4.13** RCWV*2.5 or Max. Overload Voltage whichever is lower for 5 seconds
Insulation Resistance	≥10G		**JIS-C-5201-1 4.6** **IEC-60115-1 4.6** Max. Overload Voltage for 1 minute
Operational Life (Endurance)	10Ω-332KΩ: ±(0.25%+0.01Ω) <10Ω & >332KΩ: ±(0.5%+0.01Ω) 0102: ±(0.5%+0.01Ω)	<15mΩ	**MIL-STD-202 Method 108** Condition D Steady State TA=125°C at derated power. Measurement at 24±4 hours after test conclusion. 5ppm: 70±2°C, RCWV for 1000 hrs with 1.5 hrs "ON" and 0.5 hr "OFF"
Biased Humidity	<10Ω: ±(0.5%+0.01Ω) 10Ω-332KΩ: ±(0.25%+0.01Ω) >332KΩ-3.4MΩ: ±(1%+0.01Ω) >3.4MΩ: ±(2%+0.01Ω) 0102: ±(1%+0.01Ω)	<15mΩ	**MIL-STD-202 Method 103** 1344 hrs 85°C/85%RH 10% of operating power. (≦100 V)
High Temperature Exposure	10Ω-332KΩ: ±(0.25%+0.01Ω) <10Ω & >332KΩ: ±(0.5%+0.01Ω) 0102: ±(1%+0.01Ω)	<15mΩ	**MIL-STD-202 Method 108** at 125°C/+155°C for 1000 hrs
Board Flex	10Ω-332KΩ: ±(0.1%+0.01Ω) <10Ω & >332KΩ: ±(0.2%+0.01Ω) 0102: ±(0.5%+0.01Ω)	<15mΩ	**AEC-Q200-005** Bending once for 60 seconds with 2mm
Solderability	95% min. coverage		**JIS-C-5201-1 4.17** **IEC-60115-1 4.17** **J-STD-002** 245±5°C for 3 seconds
Resistance to Soldering Heat	10Ω-332KΩ: ±(0.1%+0.01Ω) <10Ω & >332KΩ: ±(0.25%+0.01Ω) 0102: ±(0.25%+0.01Ω) 5ppm: ±(0.05%+0.01Ω)	<15mΩ	**MIL-STD-202 Method 210** 260±5°C for 10 seconds
Voltage Proof	No breakdown or flashover		**JIS-C-5201-1 4.7** **IEC-60115-1 4.7** 1.42 times Max. Operating Voltage for 1 minute
Leaching	Individual leaching area ≦5% Total leaching area ≦ 10%		**JIS-C-5201-1 4.18** **IEC-60068-2-58 8.2.1** 260±5°C for 30 seconds
Temperature Cycling	10Ω-332KΩ: ±(0.15%+0.01Ω) <10Ω & >332KΩ: ±(0.5%+0.01Ω) 0102: ±(1%+0.01Ω)	<15mΩ	**JESD22 Method JA-104** -55°C to +125°C, 1000 cycles
Mechanical Shock	±(0.25%+0.01Ω)	<15mΩ	**MIL-STD-202 Method 213** Wave Form: Tolerance for half sine shock pulse. Peak value is 100g's. Normal duration (D) is 6.
Vibration	±(0.5%+0.01Ω)	<15mΩ	**MIL-STD-202 Method 204** 5 g's for 20 min., 12 cycles each of 3 orientations, 10-2000 Hz
ESD	±(0.5%+0.01Ω)	<15mΩ	**AEC-Q200-002** Human body, 0102/0204:2KV; 0207:4KV
Resistance to Solvents	No visible damage on appearance and marking.		**MIL-STD-202 Method 215** Add Aqueous wash chemical - OKEM Clean or equivalent. Do not use banned solvents.

Item	Requirement		Test Method
	5% and Below	Jumper	
Terminal Strength	No broken		**AEC-Q200-006** Force of 1.8kg for 60 seconds.
Flammability	No ignition of the tissue paper or scorching or the pinewood board		**UL-94** V-0 or V-1 are acceptable. Electrical test not required.

RCWV(Rated Continuous Working Voltage)=√(P*R) or Max. Operating Voltage whichever is lower.

■Storage Temperature: 15~28°C; Humidity < 80%RH

■Shelf Life: 2 years from production date.

■Packaging

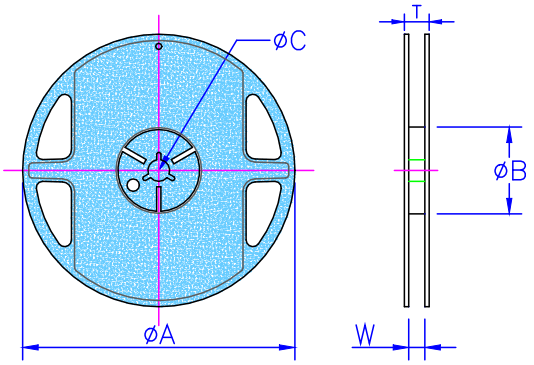

Packaging Quantity & Reel Specifications

Type	Reel Diameter	ΦA (mm)	ΦB (mm)	ΦC (mm)	W (mm)	T (mm)	Emboss Plastic Tape (EA)
CSRA0102	7 inch	178.5±1.5	60.0+1.0	13.0±0.2	9.0±0.5	12.5±0.5	3,000
	13 inch	330±1.0	100±0.5	13.0±0.2	9.5±0.5	13.5±0.5	10,000
CSRA0204	7 inch	178.5±1.5	60.0+1.0	13.0±0.2	9.0±0.5	12.5±0.5	3,000
	13 inch	330±1.0	100±0.5	13.0±0.2	9.5±0.5	13.5±0.5	10,000
CSRA0207	7 inch	178.5±1.5	60.0+1.0	13.0±0.5	13.0±0.5	15.5±0.5	2,000
	13 inch	330±1.0	99±0.5	13.5±0.5	13.4±1	17.8±1	6,000

Emboss Plastic Tape Specifications

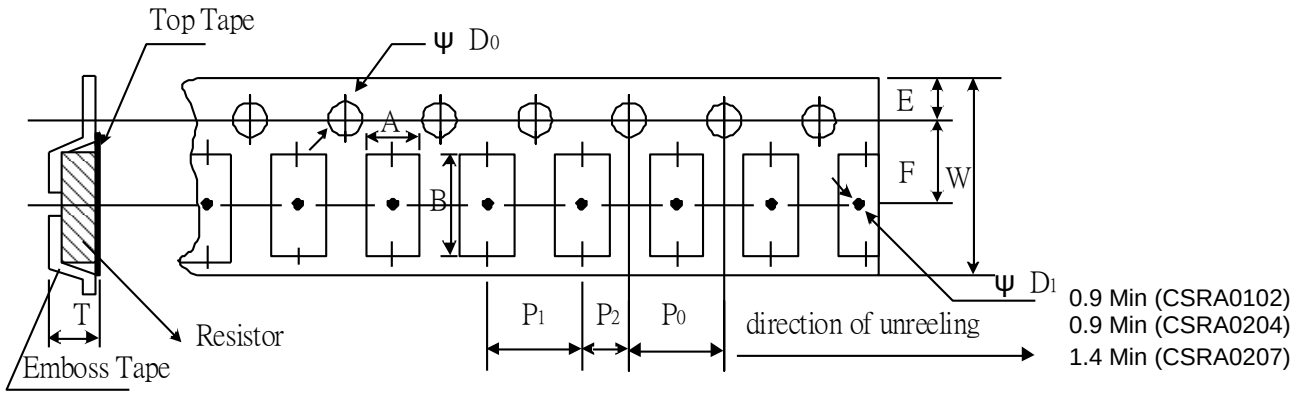

Type	A (mm)	B (mm)	W (mm)	E (mm)	F (mm)	P_0 (mm)	P_1 (mm)	P_2 (mm)	$ΦD_0$ (mm)	T (mm)
CSRA0102	1.30±0.20	2.40±0.20	8.0±0.10	1.75±0.10	3.50±0.05	4.00±0.10	4.00±0.10	2.00±0.05	1.50+0.10	1.50±0.10
CSRA0204	1.55±0.20	3.65±0.20	8.0±0.10	1.75±0.10	3.50±0.05	4.00±0.10	4.00±0.10	2.00±0.05	1.50+0.10	1.80±0.10
CSRA0207	2.40±0.10	6.15±0.10	12.0±0.10	1.75±0.10	5.50±0.05	4.00±0.10	4.00±0.10	2.00±0.05	1.50+0.10	2.70±0.10

■Pulse withstanding capacity

The single impulse graph is the result of the impulse of rectangular shape applied. The limit of acceptance was a shift in resistance of less than 1% from the initial value. The power applied was subject to the restrictions of the maximum permissible impulse voltage graph shown.

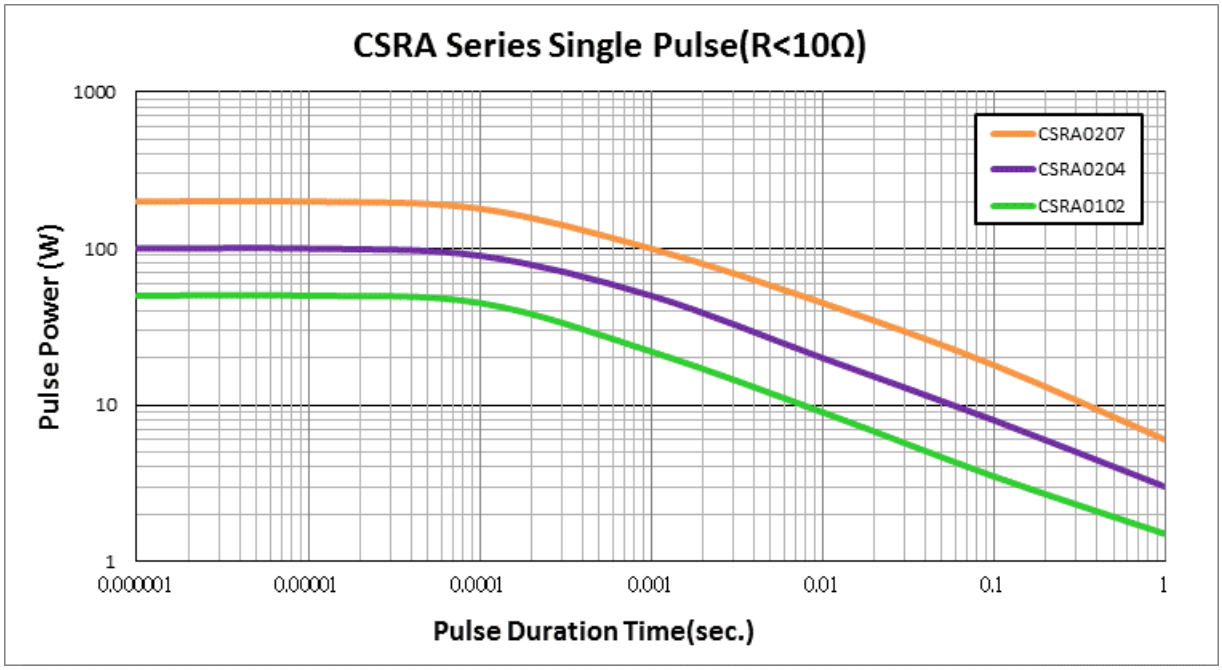

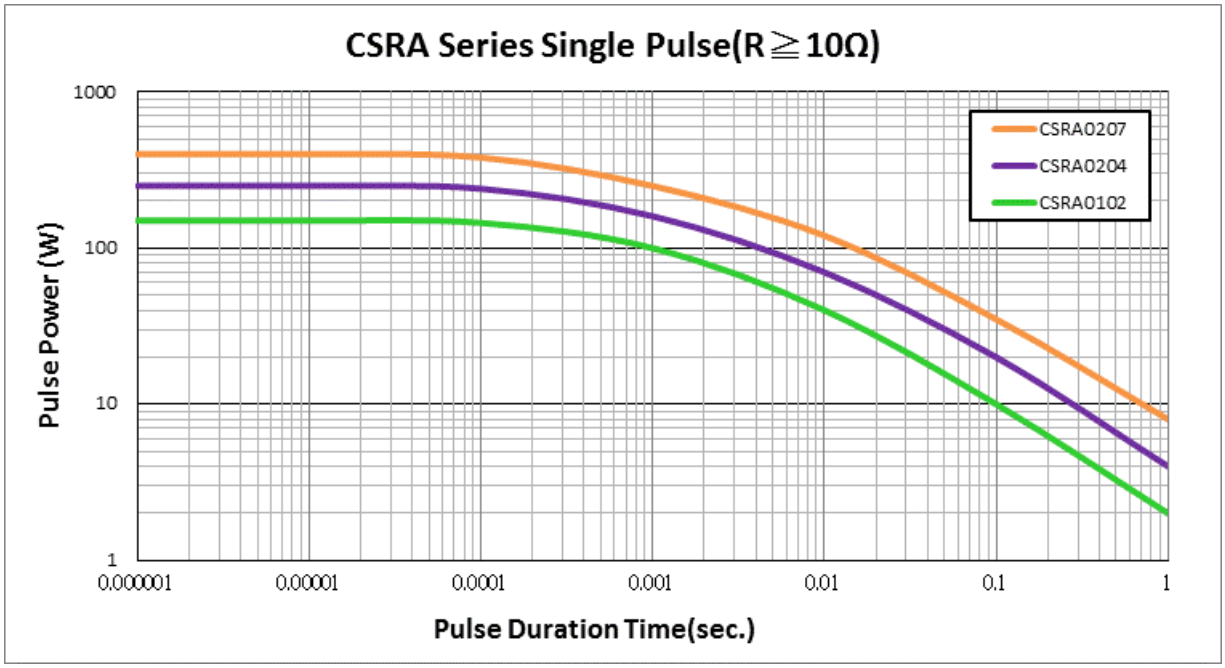

■Continuous Pulse

The continuous load graph was obtained by applying repetitive rectangular pulses where the pulse period was adjusted so that the average power dissipated in the resistor was equal to its rated power at 70°C. Again the limit of acceptance was a shift in resistance of less than 1% from the initial value.

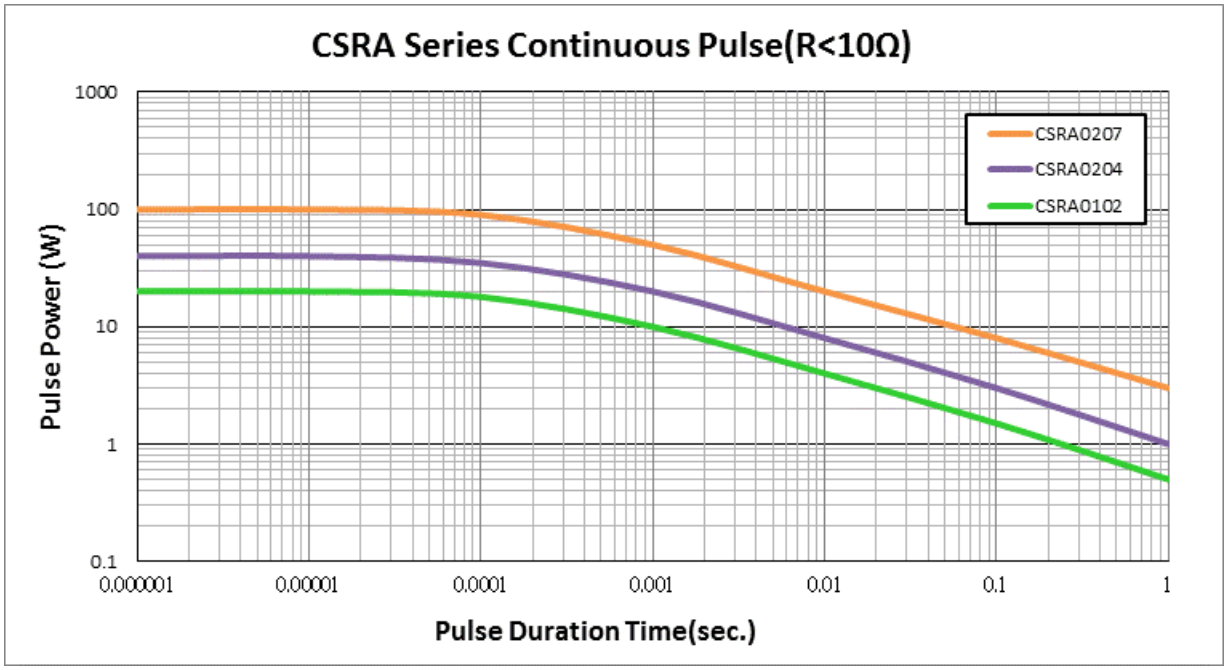

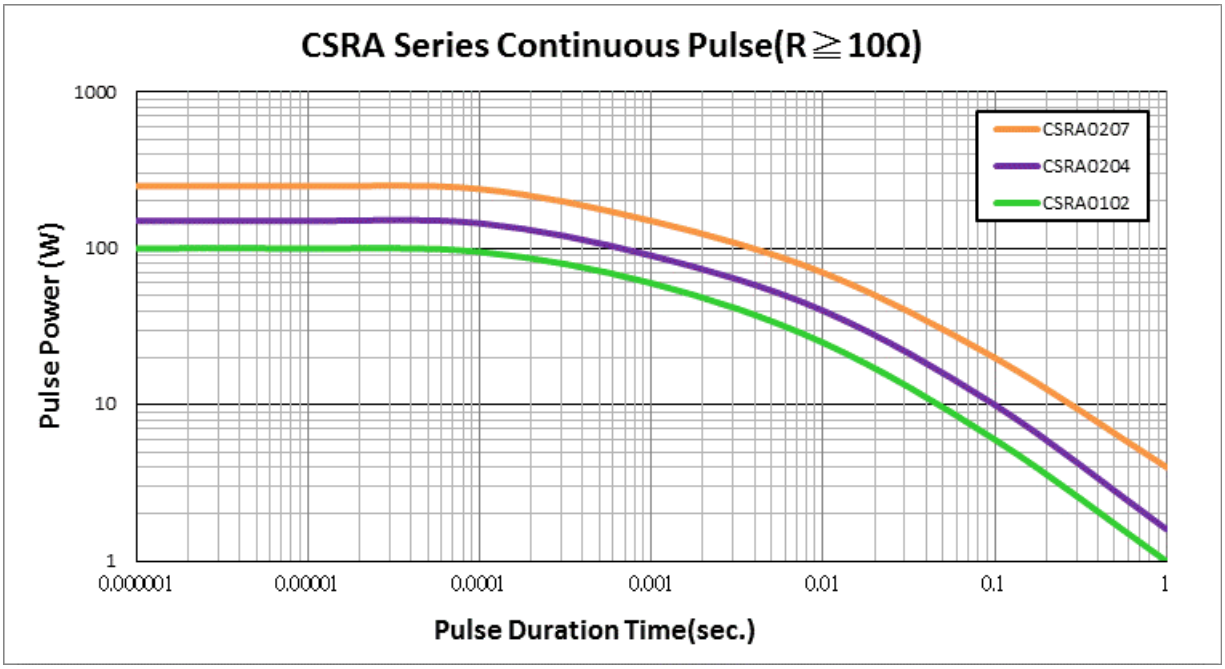

■Lightning Surge

Resistors are tested in accordance with IEC 60115-1 using both 1.2/50us and 10/700us pulse shapes. The limit of acceptance is a shift in resistance of less than 0.5% from the initial value.

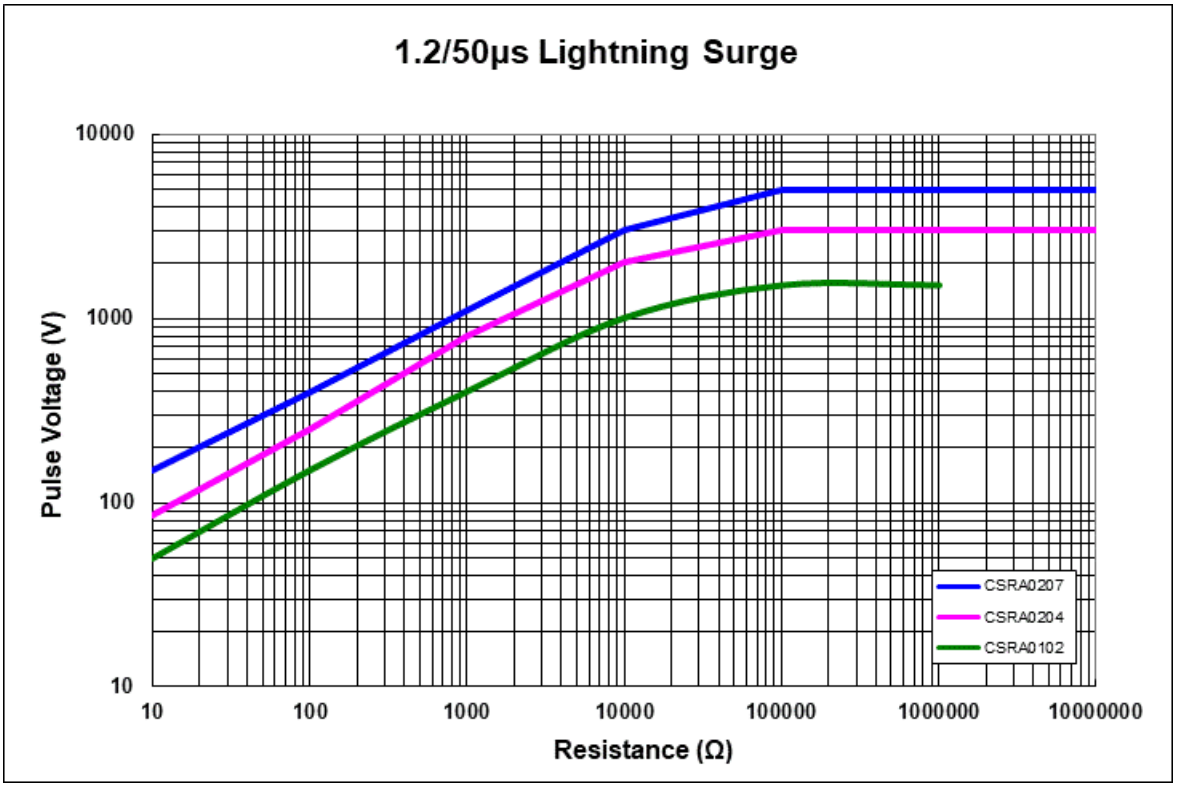

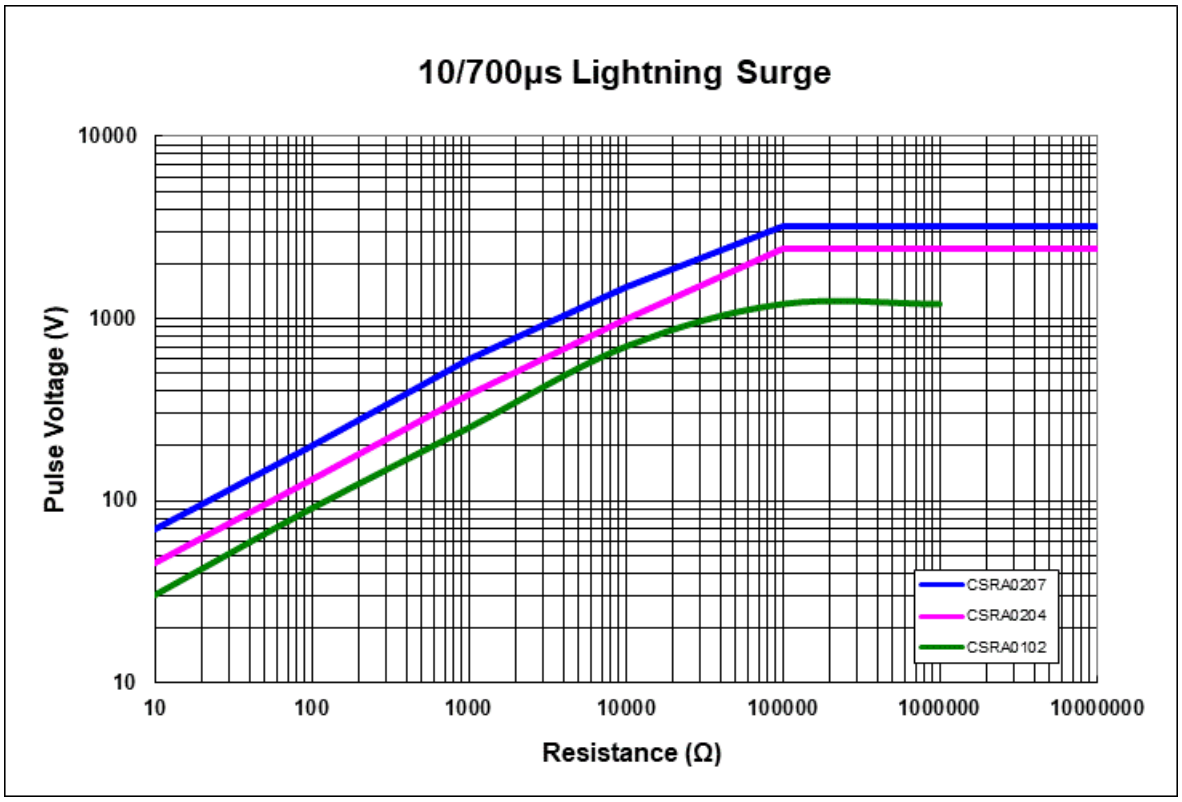

■Frequency behavior

Resistors are designed to function according to ohmic laws. This is basically true of resistors for frequencies up to 100kHz. At higher frequencies, there is an additional contribution to the impedance by an ideal resistor switched in series with a coil and both switched parallel to a capacitor. The values of the capacitance and inductance are mainly determined by the dimensions of the terminations and the conductive path length.

The environment surrounding components has a large influence on the behavior of the component on the printed-circuit board.

Frequency vs. Impedance

CSRA Series (CSRA0204)

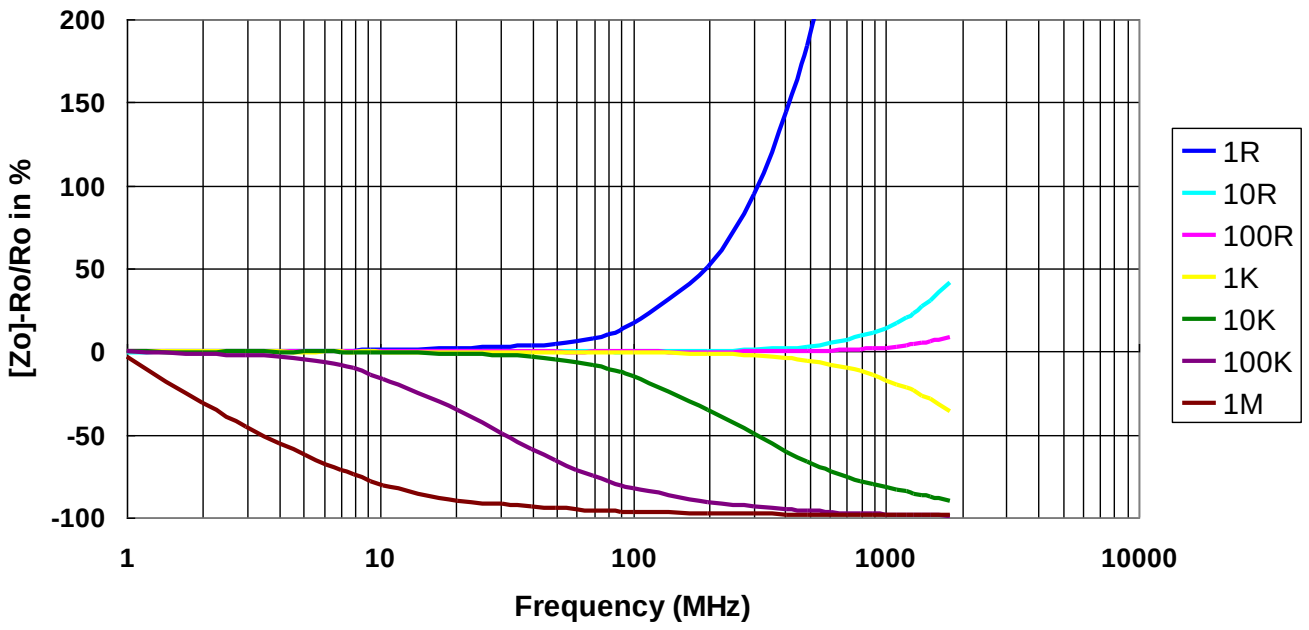

Frequency vs. Phase Angle

CSRA Series (CSRA0204)

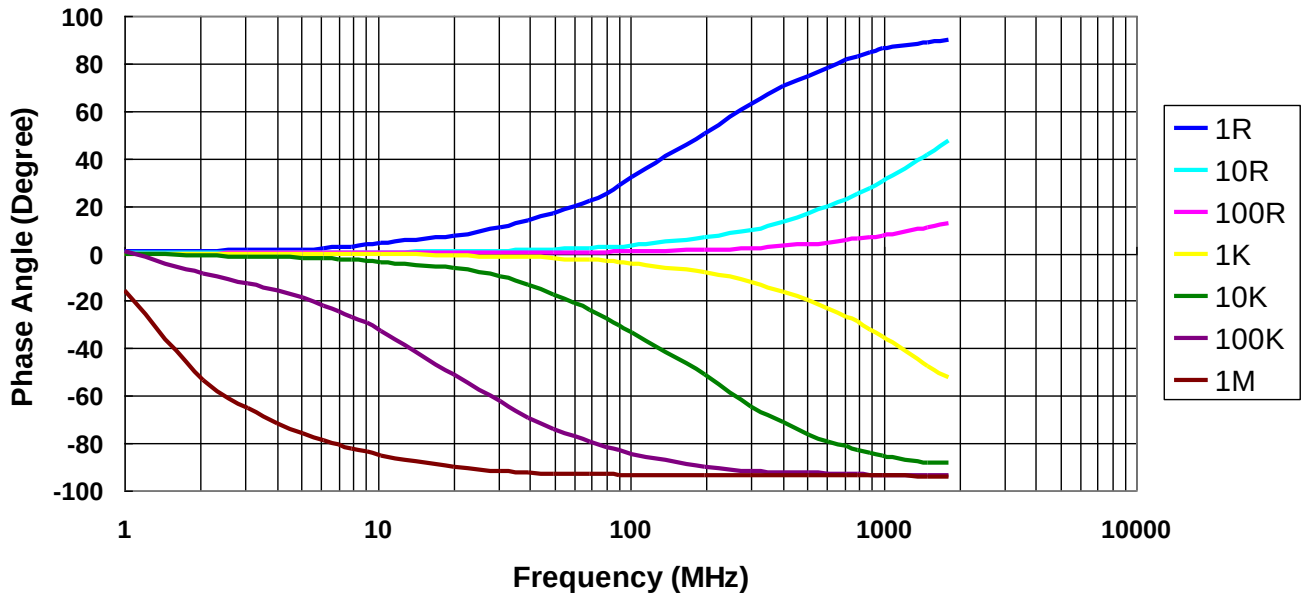

Frequency vs. Impedance
CSRA Series (CSRA0207)

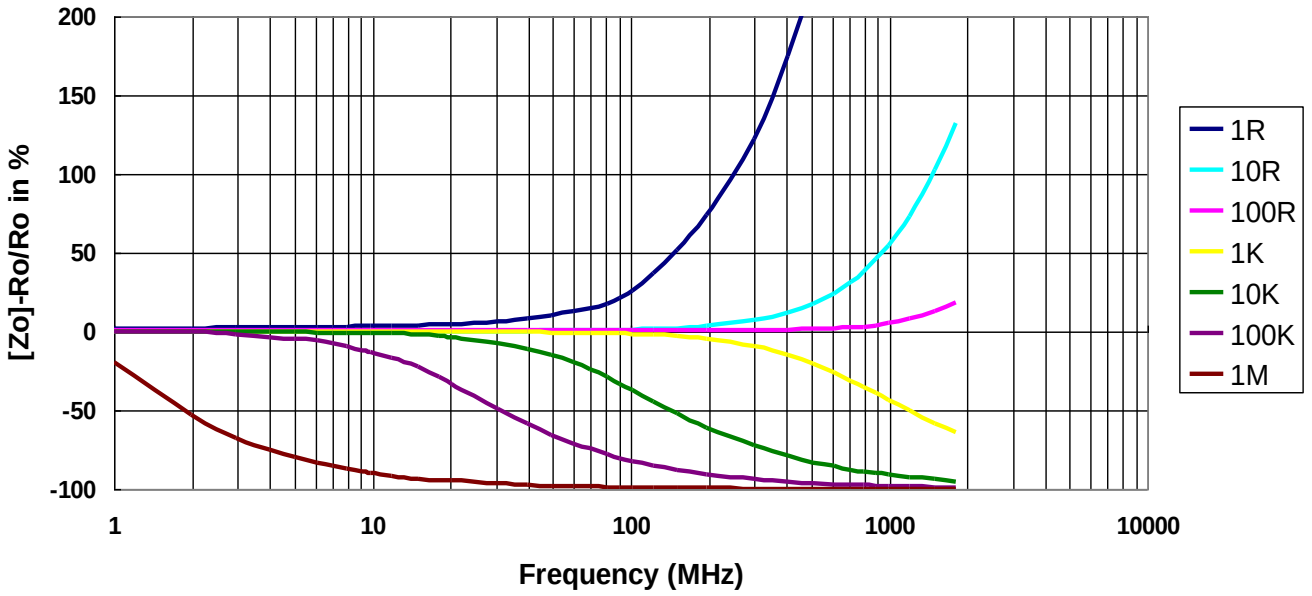

Frequency vs. Phase Angle
CSRA Series (CSRA0207)

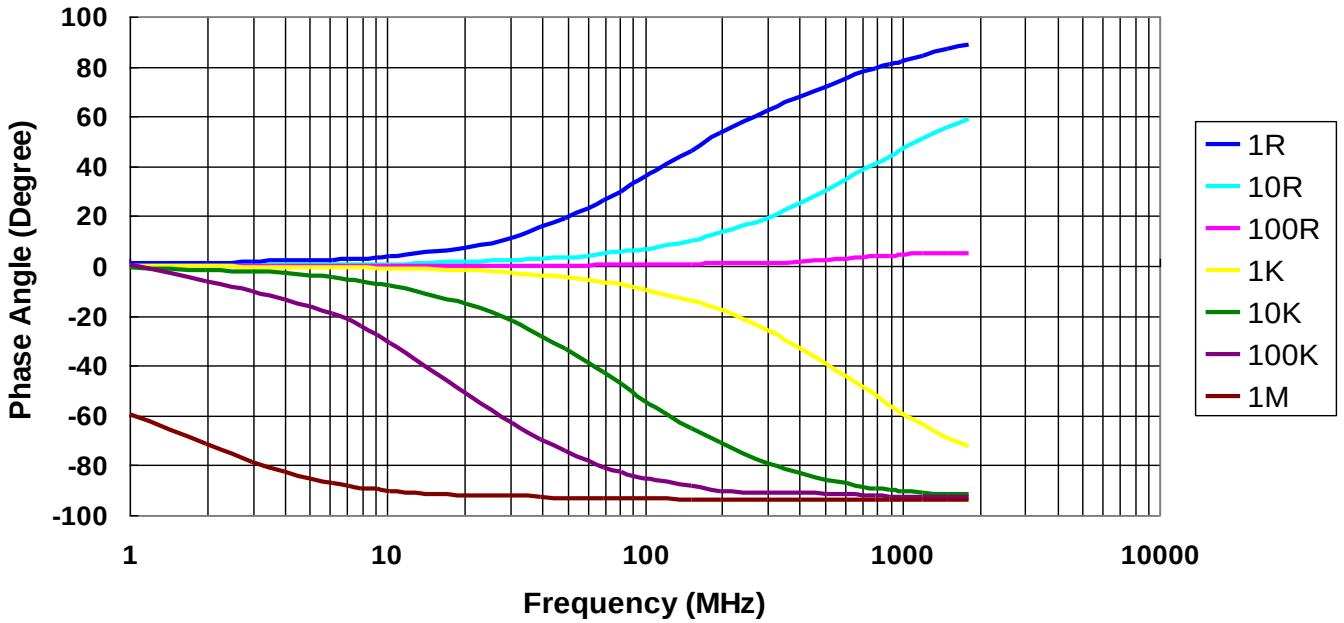

■Marking & Resistance Tolerance

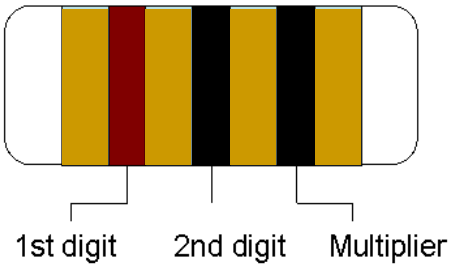

±5%	E-24	1.0	1.1	1.2	1.3	1.5	1.6	1.8	2.0	2.2	2.4	2.7	3.0	3.3	3.6	3.9	4.3	4.7	5.1	5.6	6.2	6.8	7.5	8.2	9.1

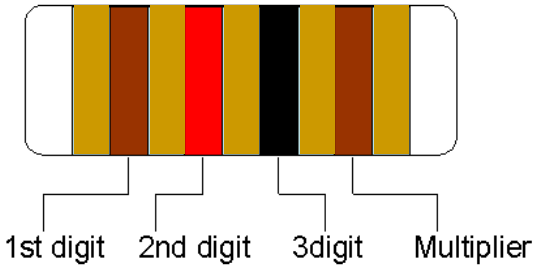

±1%	E-96	1.00	1.02	1.05	1.07	1.10	1.13	1.15	1.18	1.21	1.24	1.27	1.30	1.33	1.37	1.40	1.43	1.47	1.50	1.54	1.58	1.62	1.65	1.69	1.74
		1.78	1.82	1.87	1.91	1.96	2.00	2.05	2.10	2.15	2.21	2.26	2.32	2.37	2.43	2.49	2.55	2.61	2.67	2.74	2.80	2.87	2.94	3.01	3.09
		3.16	3.24	3.32	3.40	3.48	3.57	3.65	3.74	3.83	3.92	4.02	4.12	4.22	4.32	4.42	4.53	4.64	4.75	4.87	4.99	5.11	5.23	5.36	5.49
		5.62	5.76	5.90	6.04	6.19	6.34	6.49	6.65	6.81	6.98	7.15	7.32	7.50	7.68	7.87	8.06	8.25	8.45	8.66	8.87	9.09	9.31	9.53	9.76
±0.5% ±0.25% ±0.1%	E-192	10.0	10.1	10.2	10.4	10.5	10.6	10.7	10.9	11.0	11.1	11.3	11.4	11.5	11.7	11.8	12.0	12.1	12.3	12.4	12.6	12.7	12.9	13.0	13.2
		13.3	13.5	13.7	13.8	14.0	14.2	14.3	14.5	14.7	14.9	15.0	15.2	15.4	15.6	15.8	16.0	16.2	16.4	16.5	16.7	16.9	17.2	17.4	17.6
		17.8	18.0	18.2	18.4	18.7	18.9	19.1	19.3	19.6	19.8	20.0	20.3	20.5	20.8	21.0	21.3	21.5	21.8	22.1	22.3	22.6	22.9	23.2	23.4
		23.7	24.0	24.3	24.6	24.9	25.2	25.5	25.8	26.1	26.4	26.7	27.1	27.4	27.7	28.0	28.4	28.7	29.1	29.4	29.8	30.1	30.5	30.9	31.2
		31.6	32.0	32.4	32.8	33.2	33.6	34.0	34.4	34.8	35.2	35.7	36.1	36.5	37.0	37.4	37.9	38.3	38.8	39.2	39.7	40.2	40.7	41.2	41.7
		42.2	42.7	43.2	43.7	44.2	44.8	45.3	45.9	46.4	47.0	47.5	48.1	48.7	49.3	49.9	50.5	51.1	51.7	52.3	53.0	53.6	54.2	54.9	55.6
		56.2	56.9	57.6	58.3	59.0	59.7	60.4	61.2	61.9	62.6	63.4	64.2	64.9	65.7	66.5	67.3	68.1	69.0	69.8	70.6	71.5	72.3	73.2	74.1
		75.0	75.9	76.8	77.7	78.7	79.6	80.6	81.6	82.5	83.5	84.5	85.6	86.6	87.6	88.7	89.8	90.9	92.0	93.1	94.2	95.3	96.5	97.6	98.8

Color	Digit	Multiplier
Silver	-	10^{-2}
Gold	-	10^{-1}
Black	0	10^{0}
Brown	1	10^{1}
Red	2	10^{2}
Orange	3	10^{3}
Yellow	4	10^{4}
Green	5	10^{5}
Blue	6	10^{6}
Violet	7	10^{7}
Grey	8	10^{8}
White	9	10^{9}

※ Resistance more than two significant figures(<1R) or more than three significant figures(>1R) will not provide color code.

REVISION HISTORY

REVISION	DATE	CHANGE NOTIFICATION	DESCRIPTION
Version A	Sep 24, 2020	-	- New product release
Version A1	Mar 10, 2021	-	- Modify Soldering Condition (IPC/JEDEC J-STD-020)
Version A2	Sep 3, 2021	-	- Increase Pulse Curve
Version A3	Sep 29, 2021	-	- Add in Shelf Life: 2 years from production date
Version A4	Dec 21, 2021	-	- Expand the resistance range to 10M - Expansion of the resistance range of TCR - Newly added antistatic tape packaging for packaging methods
Version A5	Feb 15, 2022	-	- Derating Curve changes the temperature range
Version A6	Apr 19, 2022	-	- Add Lightning Surge curve and Frequency behavior
Version A7	Jun 15, 2022	-	- Modify Soldering Condition
Version A8	Jun 06, 2023	-	- Environmental Characteristics updated
Version A9	Sep 05, 2023	-	- Features added Thin film technology