REV.	DESCRIPTION	ECN NO.	NAME	DATE

12PIN DEFINE TABLE				
PIN	SIGNAL		PIN	SIGNAL
A12	GND		B1	GND
A11	–		B2	–
A10	–		B3	–
A9	VBUS		B4	VBUS
A8	–		B5	VCONN
A7	Dn1		B6	–
A6	Dp1		B7	–
A5	CC		B8	–
A4	VBUS		B9	VBUS
A3	–		B10	–
A2	–		B11	–
A1	GND		B12	GND

SPECIFICATION:

1. Material & Finish:See the list;
2. Mechanical:
   - 2.1.Mating force:5–20N;
   - 2.2.Unmating force:Initial:8–20N;Final:6–20N;
   - 2.3.Durability:10000 Cycles;
   - 2.4.Shell withdrawal force:50Nf Min.(Jointing);
3. Electrical:
   - 3.1.Current Rating:5A Max.for VBus contact;
   - 3.2.Voltage Rating:20V Max.;
   - 3.3.Dielectric Withstanding volage:100VAc;
   - 3.4.Contact resistance:40m Ohms Max.;
   - 3.5.Insulation Resistance:100M Ohms Min.;
4. Environmental:
   - 4.1.Operating temperature:–40°C~+85°C;
   - 4.2.Salt Spray Test:24H/48H/96H Min.;
   - 4.3.Wetting Temperature:265±5°C,5±0.5s

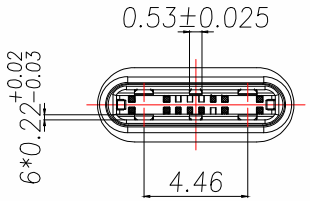

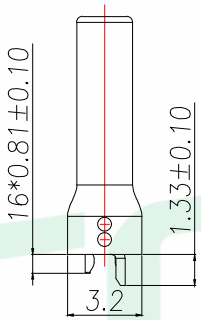

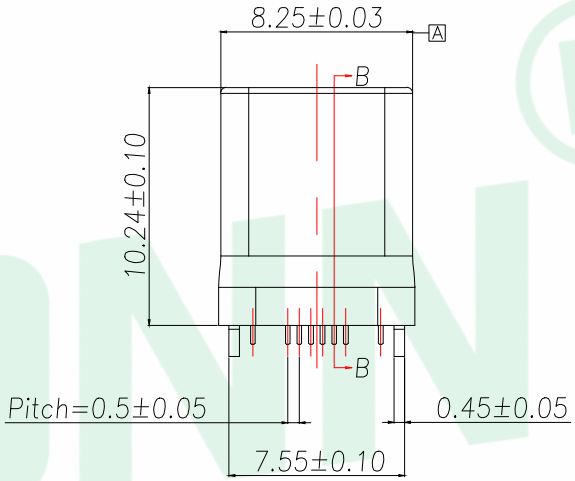

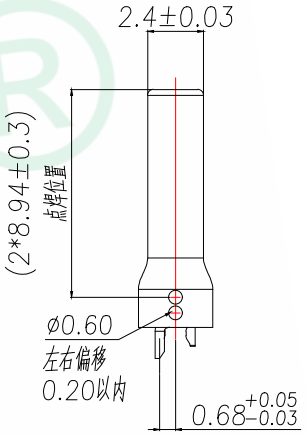

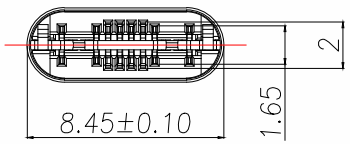

12Pin Bottom View

NO.	PART NAME	Q'TY	MATERIAL	FINISH
6	Stuff	1	LCP	UL 94 V–0,Nature
5	Shell	1	SUS316L	50u"Ni Min.
4	Latch	1	SUS301,T=0.40mm	50u"Ni/100u"Sn
3	VCC Contact	2*4	C7025 TM04	Au/50u"Ni Min.
2	Signal Contact	4/8	C7025 TM04	Au/50u"Ni Min.
1	Housing	1	LCP	UL94 V–0

GENERAL TOLERANCE

DIM.	TOL.
x.	±0.50
x.x	±0.35
x.xx	±0.25
GENERAL ANGLE:	
x.°	±5.0°
x.x°	±3.0°
x.xx°	±2.5°

DONGGUAN BAOXUN PRECISION TECHNOLOGY CO., LTD

BXCONN®

TITLE: Type–C Plug 12Pin T3.2拉伸 外壳有弹片

DWG. NO.: UC03–0B12F10N10 | CHECKED: MAX

PART NO.: UC03–0B12F10N10 | DRAWN: ELLA

UNIT: mm | SCALE: none | SHEET: 1of 1 | DWG. SIZE: A4 | LAYER: bxconn | APPROVED: WILL

REV.	DESCRIPTION	ECN NO.	NAME	DATE

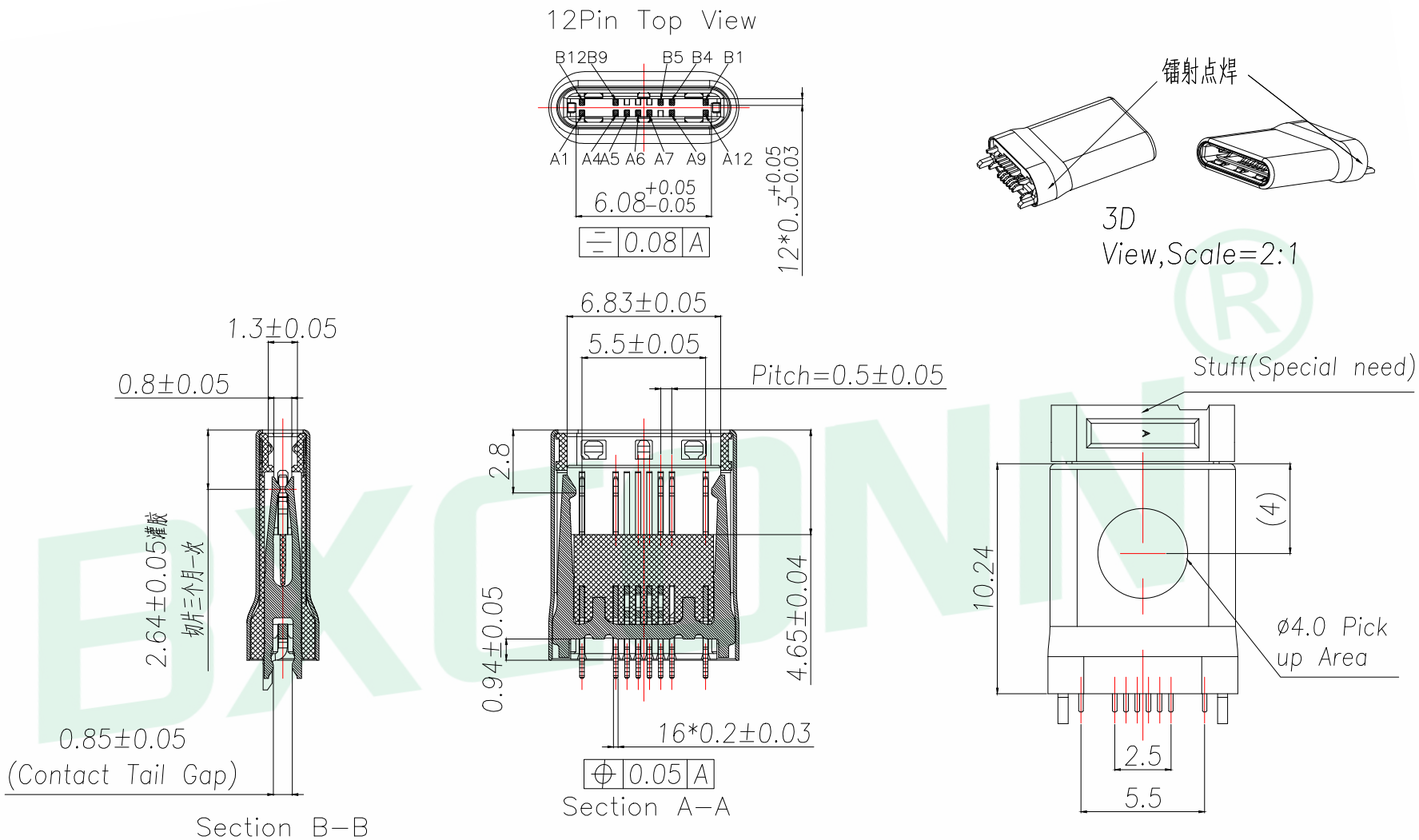

GENERAL TOLERANCE						DONGGUAN BAOXUN PRECISION TECHNOLOGY CO., LTD	BXCONN®
DIM.	TOL.					TITLE: Type−C Plug 12Pin T3.2拉伸 外壳有弹片	
x.	±0.50						
x.x	±0.35						
x.xx	±0.25						
GENERAL ANGLE:							
x.°	±5.0°						
x.x°	±3.0°						
x.xx°	±2.5°						
						DWG. NO.: UC03−0B12F10N10	CHECKED: MAX
						PART NO.: UC03−0B12F10N10	DRAWN: ELLA
		UNIT: mm	SCALE: none	SHEET: 1of 1	DWG. SIZE: A4	LAYER: bxconn	APPROVED: WILL

REV.	DESCRIPTION	ECN NO.	NAME	DATE

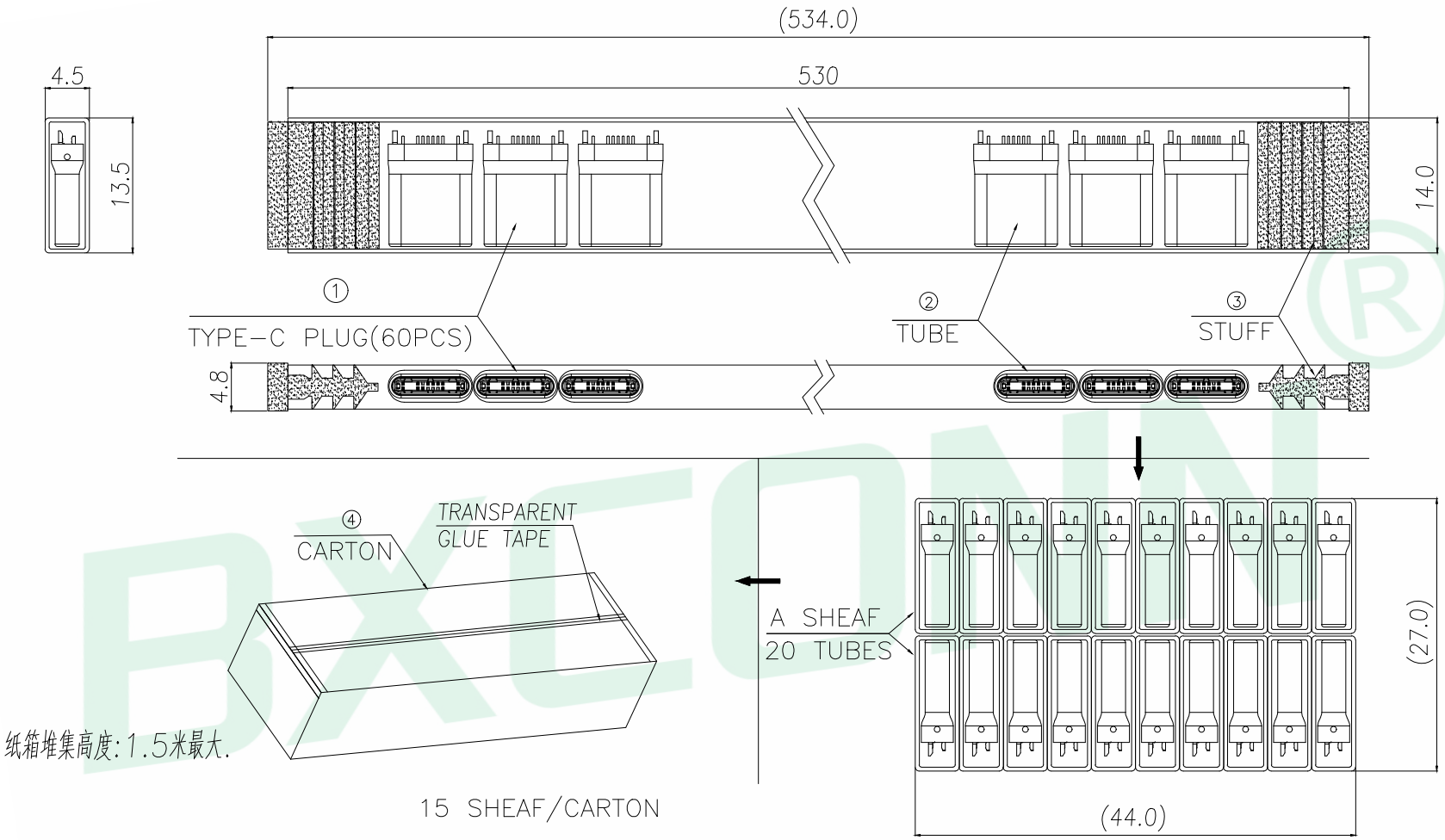

NO.	NAME	SPEC	Q'TY
1	TYPE C PLUG(NO PCB)		18000PCS/CARTON
2	TUBE	PVC,530*13.5*4.4mm	20*15=300PCS/CARTON
3	STUFF	RUBBER,11*12.7*4.8mm	2*300=600PCS/CARTON
4	CARTON	CORRUGATED BOARD,A=B 570*270*120mm	1PCS/PACKAGE

GENERAL TOLERANCE

DIM.	TOL.
x.	±0.50
x.x	±0.35
x.xx	±0.25
GENERAL ANGLE:	
x.°	±5.0°
x.x°	±3.0°
x.xx°	±2.5°

DONGGUAN BAOXUN PRECISION TECHNOLOGY CO., LTD

BXCONN®

TITLE: Type-C Plug 12Pin T3.2拉伸 外壳有弹片

DWG. NO.: UC03-0B12F10N10 | CHECKED: MAX

PART NO.: UC03-0B12F10N10 | DRAWN: ELLA

UNIT:	SCALE:	SHEET:	DWG. SIZE:	LAYER:	APPROVED:
mm	none	1of 1	A4	bxconn	WILL