FEATURES

- Complementary to MJD32C

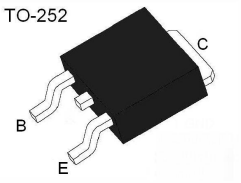

GK xxx
MJD31C

MAXIMUM RATINGS AND ELECTRICAL CHARACTERISTICS

Absolute Maximum Rating (Ta=25℃)

Parameter		Symbol	Value	Unit
Collector-Base Voltage		BV_{CBO}	100	V
Collector-Emitter Voltage		BV_{CEO}	100	V
Emitter-Base Voltage		BV_{EBO}	5	V
Collector Current(DC)		I_C	3	A
Collector peak current		I_{CM}	5	A
Collector Dissipation	Ta =25 ℃	P_C	2	W
	Tc =25 ℃		40	
Junction Temperature		T_j	150	℃
Storage Temperature		T_{stg}	-65～150	℃

ELECTRICAL CHARACTERISTICS(Ta=25℃ unless otherwise specified)

Parameter	Symbol	Conditions	Value			Unit
			Min	Typ	Max	
Collector-Emitter Sustaining Voltage	$V_{CEO(sus)}$	I_C = 30mA，I_B = 0	100			V
Collector cut-off current	I_{CEO}	V_{CE} =60V，I_E = 0			0.3	mA
Emitter cut-off current	I_{EBO}	V_{EB} = 5V，I_E = 0			1	mA
Collector cut-off current	I_{CES}	V_{CE} = 100V，V_{BE} = 0			0.2	mA
DC current gain*	h_{FE}	V_{CE}= 4V，I_C= 1A V_{CE}= 4V，I_C= 3A	25 10			
Collector-emitter saturation voltage*	$V_{CE(sat)}$	I_C = 3A，I_B =375mA			1.2	V
Base-Emitter ON Voltage*	$V_{BE\ (on)}$	V_{CE}= 4V，I_C= 3A			1.8	V
Current Gain Bandwidth Product*	f_T	V_{CE}=10V, I_C=500mA	3.0			MHz

* Pulse Test : PW⩽300μs, Duty cycle⩽2%

RATING AND CHARACTERISTIC CURVES

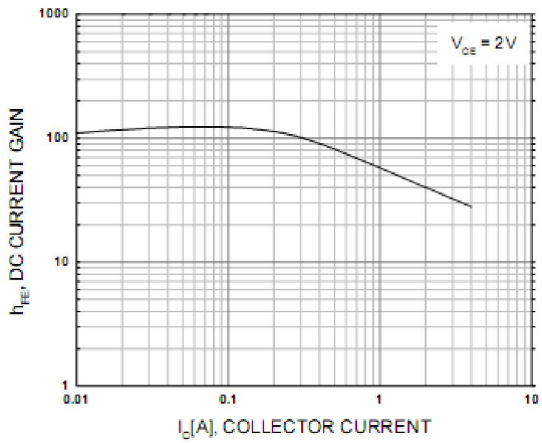

Figure 1. DC current Gain

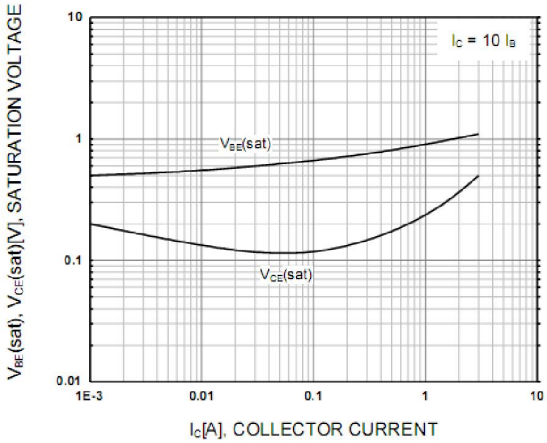

Figure 2. Base-Emitter Saturation Voltage Collector-Emitter Saturation Voltage

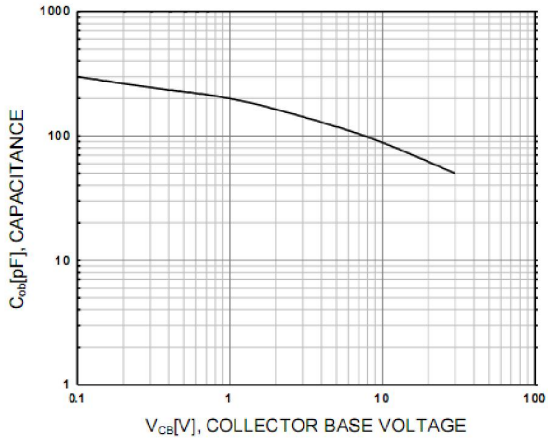

Figure 3. Collector Capacitance

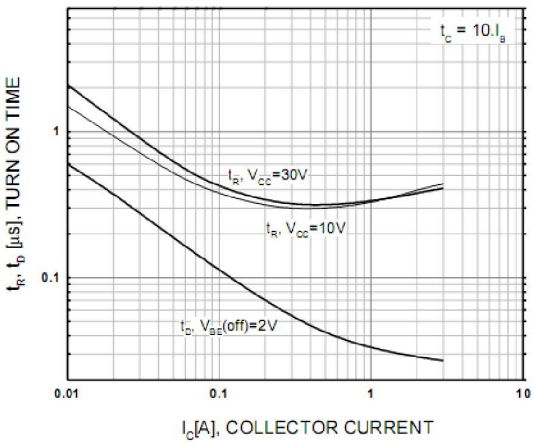

Figure 4. Turn On Time

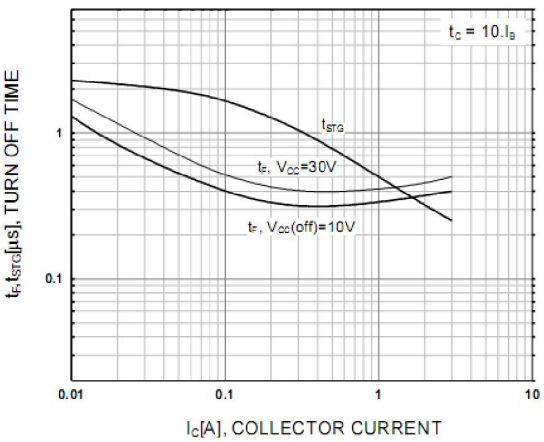

Figure 5. Turn Off Time

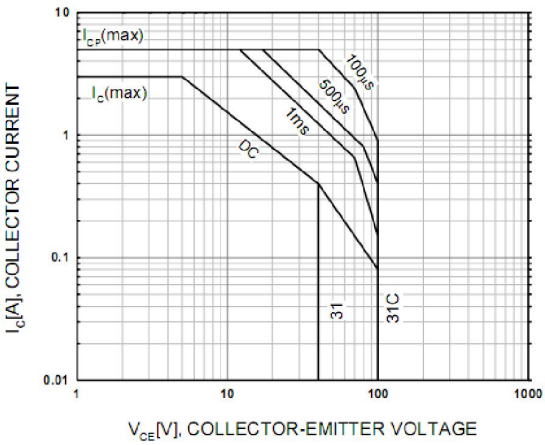

Figure 6. Safe Operating

Soldering parameters

Reflow Condition		Pb-Free assembly (see as bellow)
Pre Heat	-Temperature Min ($T_{s(min)}$)	+150℃
	-Temperature Max($T_{s(max)}$)	+200℃
	-Time (Min to Max) (ts)	60-180 secs.
Average ramp up rate (Liquid us Temp (T_L) to peak)		3℃/sec. Max
$T_{s(max)}$ to T_L - Ramp-up Rate		3℃/sec. Max
Reflow	-Temperature(T_L)(Liquid us)	+217℃
	-Temperature(t_L)	60-150 secs.
Peak Temp (T_p)		+260(+0/-5)℃
Time within 5℃ of actual Peak Temp (t_p)		30 secs. Max
Ramp-down Rate		6℃/sec. Max
Time 25℃ to Peak Temp (T_P)		8 min. Max
Do not exceed		+260℃

FIG5: Reflow condition

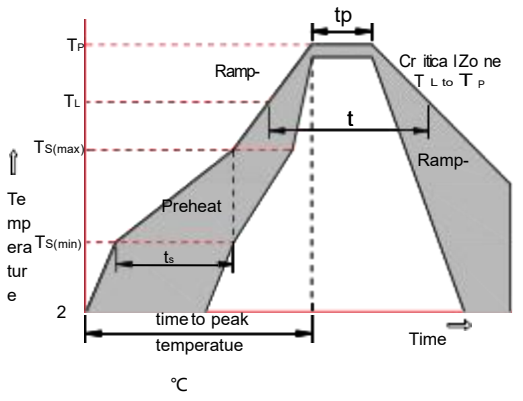

Package Dimensions & Suggested Pad Layout

TO-252

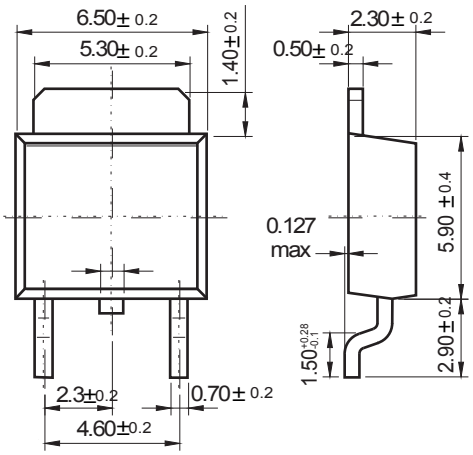

Dimensions in inches and (millimeters)

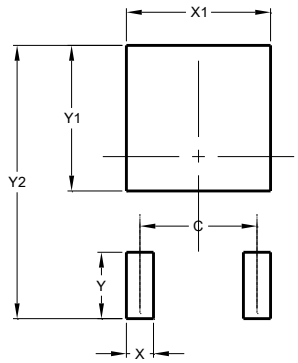

Dimensions	Value (in mm)
C	4.55
X	1.50
X1	5.80
Y	2.70
Y1	6.00
Y2	10.90

Tape & rell specification

Tape

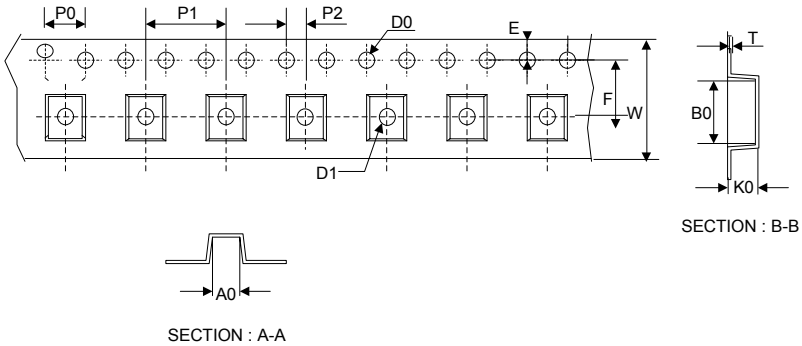

Symbol	Dimension (mm)
P0	4.00±0.20
P1	8.00±0.20
P2	2.00±0.20
D0	1.55±0.15
D1	1.55±0.20
E	1.75±0.20
F	7.50±0.20
W	16.00±0.20
A0	7.10±0.20
B0	10.50±0.20
K0	2.70±0.20
T	0.30±0.10

13” Reel

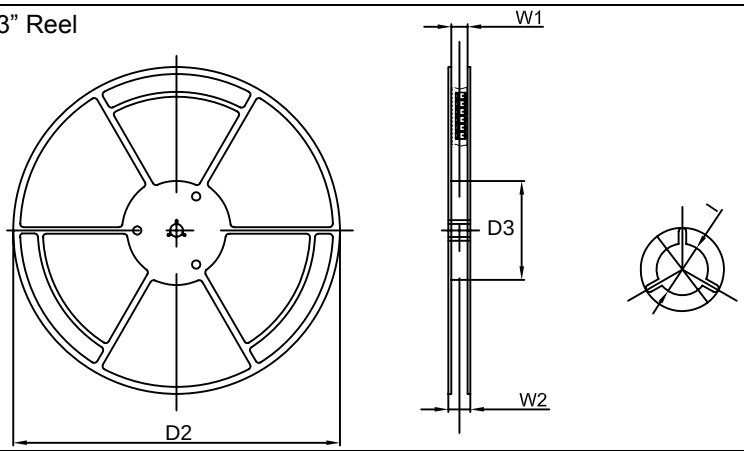

D2	330.0±5.0
D3	100.0±4.0
W1	20.0±5.0
W2	25.0±5.0
I	13.0±2.0

Quantity: 2500PCS