4N65

N-Channel Enhancement Mode MOSFET

V_{DSS}	650 V
I_D	4 A
$R_{DS(ON)}$	2.4 Ω

FEATURES

- 650V,4 A
- $R_{DS(ON)}$ = 2.4 Ω (Typ.) @ V_{GS} = 10V, I_D =2A
- Fast Switching
- Improved dv/dt Capability
- 100% Avalanche Tested

APPLICATION

- Switch Mode Power Supply(SMPS)
- Uninterruptible Power Supply(UPS)
- Power Factor Correction (PFC)

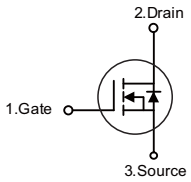

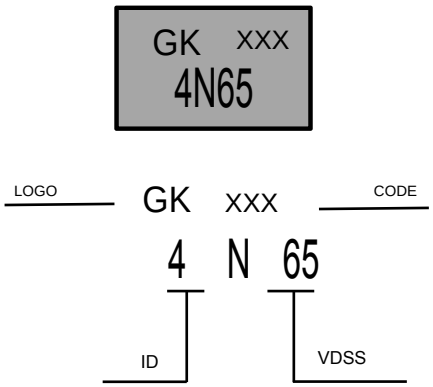

MAXIMUM RATINGS AND ELECTRICAL CHARACTERISTICS

ABSOLUTE MAXIMUM RATINGS (T_C = 25°C unless otherwise specified)

PARAMETER		SYMBOL	RATINGS	UNIT
Drain-Source Voltage		V_{DSS}	650	V
Gate-Source Voltage		V_{GSS}	±30	V
Avalanche Current (Note 2)		I_{AR}	4.0	A
Drain Current	Continuous	I_D	4.0	A
	Pulsed (Note 2)	I_{DM}	16	A
Avalanche Energy	Single Pulsed (Note 3)	E_{AS}	260	mJ
	Repetitive (Note 2)	E_{AR}	10.6	mJ
Peak Diode Recovery dv/dt (Note 4)		dv/dt	4.5	V/ns
Power Dissipation		P_D	36	W
Junction Temperature		T_J	+150	°C
Operating Temperature		T_{OPR}	-55 ~ +150	°C
Storage Temperature		T_{STG}	-55 ~ +150	°C

Note:
1. Absolute maximum ratings are those values beyond which the device could be permanently damaged. Absolute maximum ratings are stress ratings only and functional device operation is not implied.
2. Repetitive Rating : Pulse width limited by maximum junction temperature
3. L = 30mH, I_{AS} = 4A, V_{DD} = 50V, R_G = 25 Ω, Starting T_J = 25°C
4. I_{SD}≤4.4A, di/dt ≤200A/μs, V_{DD}≤BV_{DSS}, Starting T_J = 25°C

Electrical Characteristics (T_C=25℃ unless otherwise specified)

PARAMETER		SYMBOL	TEST CONDITIONS	MIN	TYP	MAX	UNIT
OFF CHARACTERISTICS							
Drain-Source Breakdown Voltage		BV_{DSS}	V_{GS} = 0 V, I_D = 250μA	650			V
Drain-Source Leakage Current		I_{DSS}	V_{DS} = 650 V, V_{GS} = 0 V			10	μA
Gate-Source Leakage Current	Forward	I_{GSS}	V_{GS} = 30 V, V_{DS} = 0 V			100	nA
	Reverse		V_{GS} = -30 V, V_{DS} = 0 V			-100	nA
Breakdown Voltage Temperature Coefficient		$\triangle BV_{DSS}/\triangle T_J$	I_D=250μA, Referenced to 25°C		0.6		V/°C
ON CHARACTERISTICS							
Gate Threshold Voltage		$V_{GS(TH)}$	V_{DS} = V_{GS}, I_D = 250μA	2.0		4.0	V
Static Drain-Source On-State Resistance		$R_{DS(ON)}$	V_{GS} = 10 V, I_D = 2A		2.4	2.8	Ω
DYNAMIC CHARACTERISTICS							
Input Capacitance		C_{ISS}	V_{DS} = 25 V, V_{GS} = 0V, f = 1MHz		520	670	pF
Output Capacitance		C_{OSS}			70	90	pF
Reverse Transfer Capacitance		C_{RSS}			8	11	pF
SWITCHING CHARACTERISTICS							
Turn-On Delay Time		$t_{D(ON)}$	V_{DD} = 325V, I_D = 4.0A, R_G = 25Ω (Note 1, 2)		13	35	ns
Turn-On Rise Time		t_R			45	100	ns
Turn-Off Delay Time		$t_{D(OFF)}$			25	60	ns
Turn-Off Fall Time		t_F			35	80	ns
Total Gate Charge		Q_G	V_{DS}= 520V,I_D = 4A V_{GS}= 10V (Note 1, 2)		15	20	nC
Gate-Source Charge		Q_{GS}			3.4		nC
Gate-Drain Charge		Q_{GD}			7.1		nC
SOURCE- DRAIN DIODE RATINGS AND CHARACTERISTICS							
Drain-Source Diode Forward Voltage		V_{SD}	V_{GS} = 0 V, I_S = 4.0A			1.4	V
Maximum Continuous Drain-Source Diode Forward Current		I_S				4.4	A
Maximum Pulsed Drain-Source Diode Forward Current		I_{SM}				17.6	A
Reverse Recovery Time		t_{rr}	V_{GS} = 0V, I_S = 4.0A, dI_F/dt = 100 A/μs (Note 1)		250		ns
Reverse Recovery Charge		Q_{RR}			1.5		μC

Note: 1. Pulse Test: Pulse width≤300μs, Duty cycle≤2%
2. Essentially independent of operating temperature

RATING AND CHARACTERISTIC CURVES

Breakdown Voltage Variation vs. Temperature

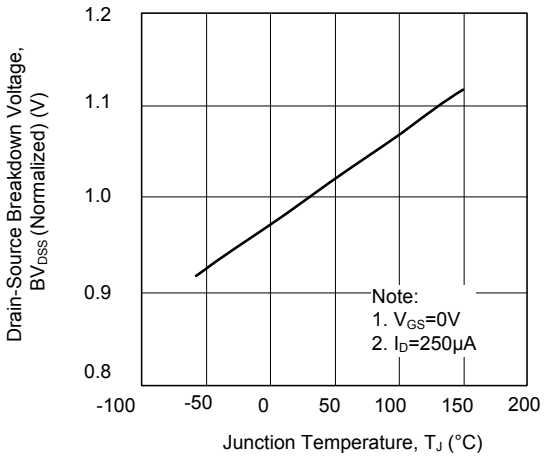

On-Resistance Junction Temperature

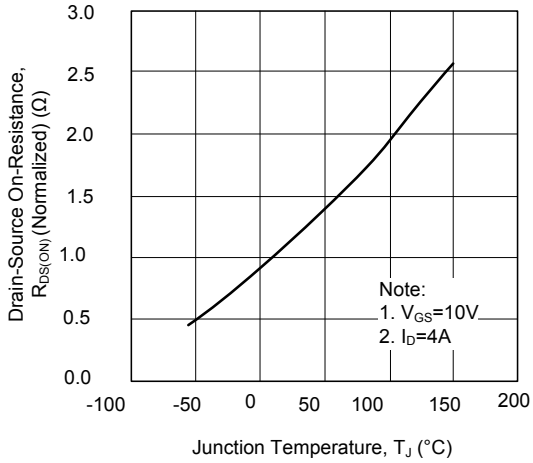

On-State Characteristics

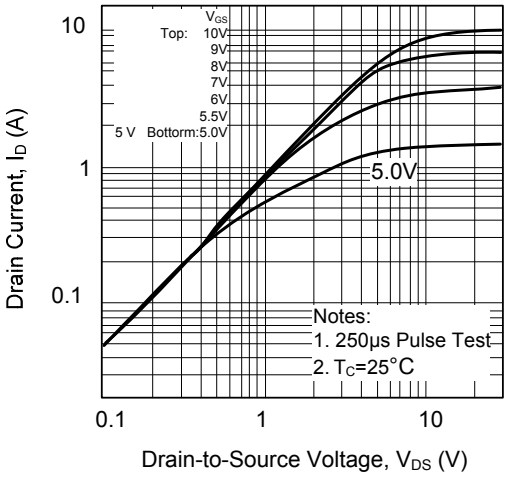

Transfer Characteristics

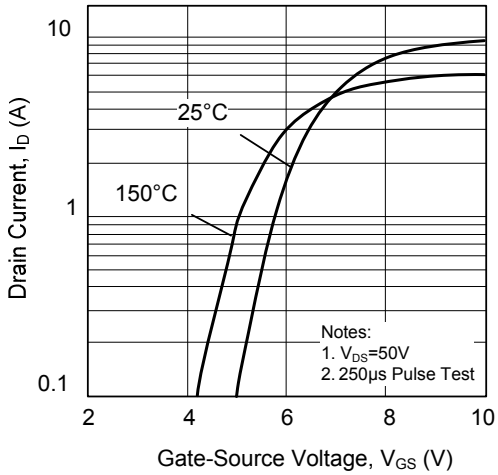

Safe Operating Area

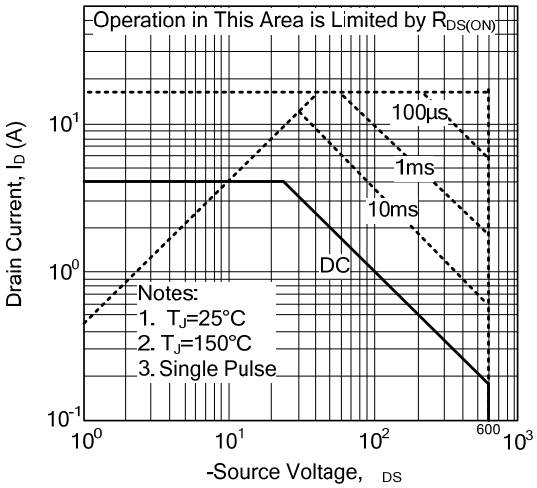

Maximum Drain Current vs. Case Temperature

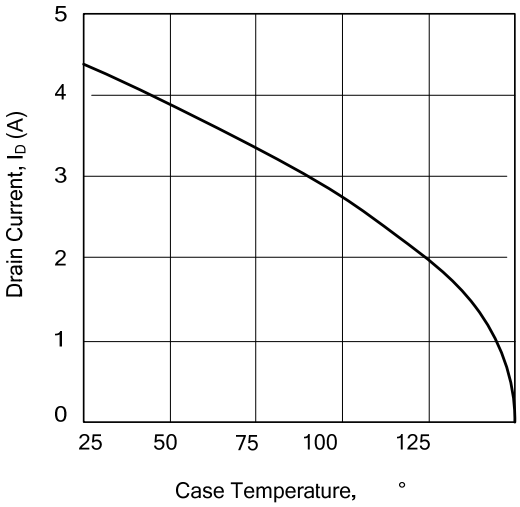

RATING AND CHARACTERISTIC CURVES

On-Resistance Variation vs. Drain Current and Gate Voltage

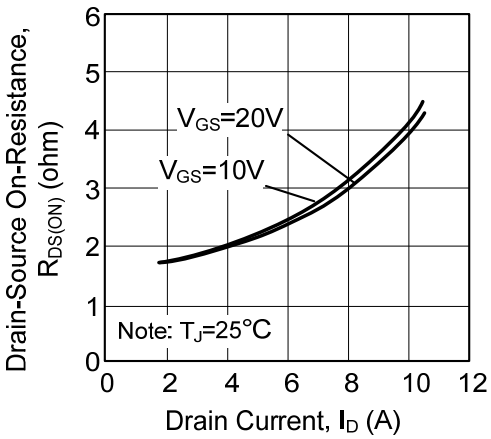

On State Current vs. Allowable Case Temperature

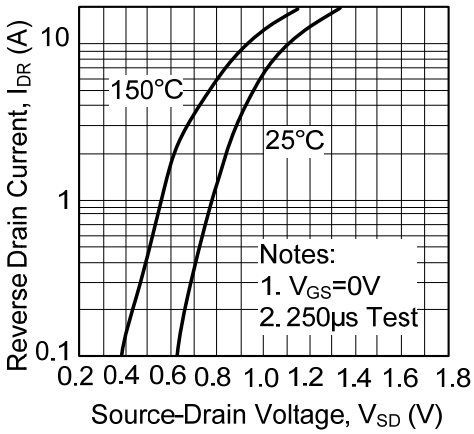

Capacitance Characteristics (Non-Repetitive)

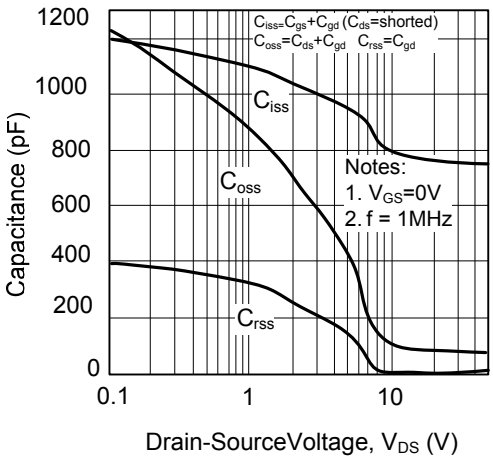

Gate Charge Characteristics

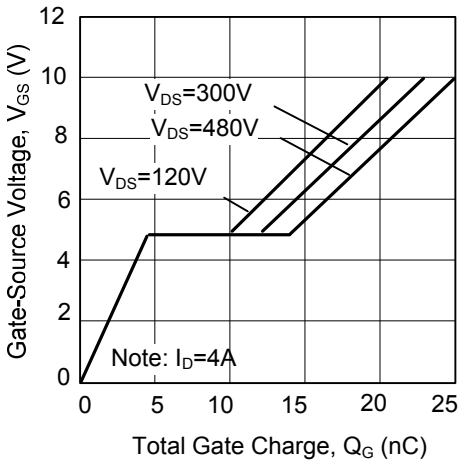

Transient Thermal Response Curve

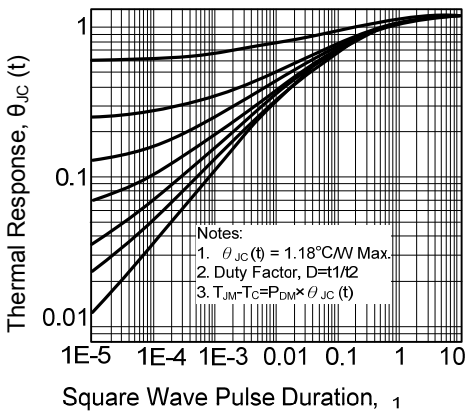

Power Dissipation

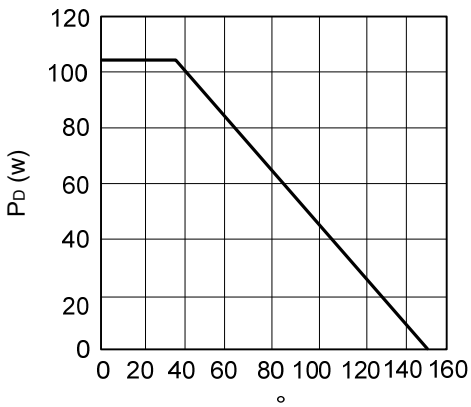

Soldering parameters

Reflow Condition		Pb-Free assembly (see as bellow)
Pre Heat	-Temperature Min ($T_{s(min)}$)	+150℃
	-Temperature Max($T_{s(max)}$)	+200℃
	-Time (Min to Max) (ts)	60-180 secs.
Average ramp up rate (Liquid us Temp (T_L) to peak)		3℃/sec. Max
$T_{s(max)}$ to T_L - Ramp-up Rate		3℃/sec. Max
Reflow	-Temperature(T_L)(Liquid us)	+217℃
	-Temperature(t_L)	60-150 secs.
Peak Temp (T_p)		+260(+0/-5)℃
Time within 5℃ of actual Peak Temp (t_p)		30 secs. Max
Ramp-down Rate		6℃/sec. Max
Time 25℃ to Peak Temp (T_P)		8 min. Max
Do not exceed		+260℃

FIG5: Reflow condition

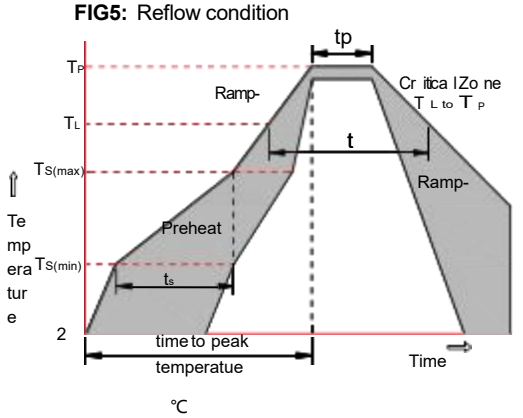

Package Dimensions & Suggested Pad Layout

TO-252

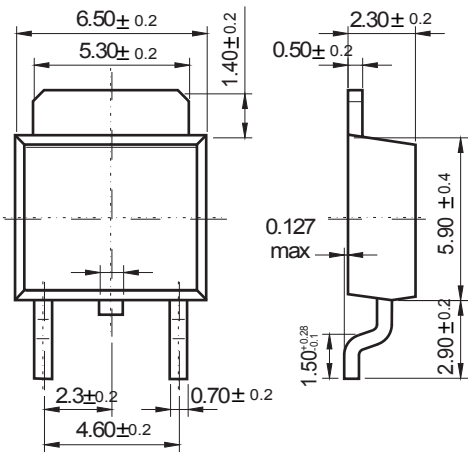

Dimensions in inches and (millimeters)

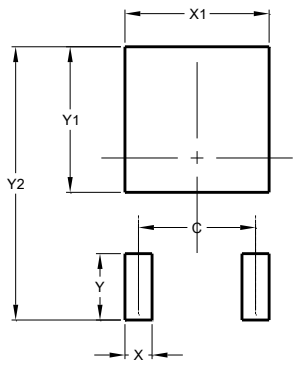

Dimensions	Value (in mm)
C	4.55
X	1.50
X1	5.80
Y	2.70
Y1	6.00
Y2	10.90

Tape & rell specification

Tape

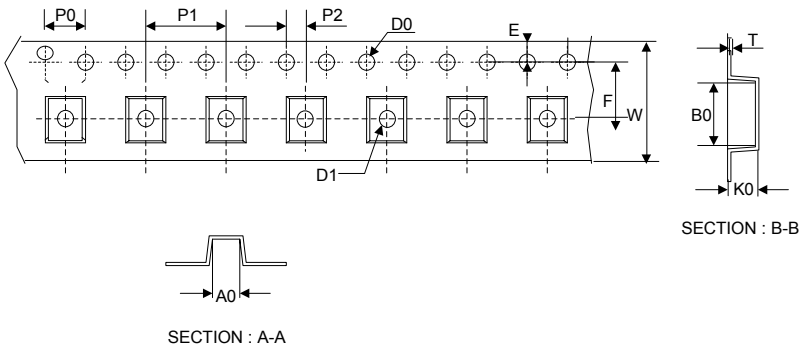

Symbol	Dimension (mm)
P0	4.00±0.20
P1	8.00±0.20
P2	2.00±0.20
D0	1.55±0.15
D1	1.55±0.20
E	1.75±0.20
F	7.50±0.20
W	16.00±0.20
A0	7.10±0.20
B0	10.50±0.20
K0	2.70±0.20
T	0.30±0.10

13” Reel

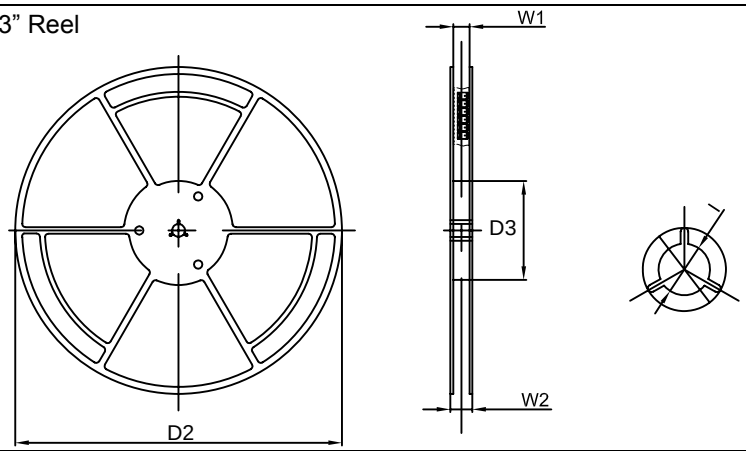

Symbol	Dimension (mm)
D2	330.0±5.0
D3	100.0±4.0
W1	20.0±5.0
W2	25.0±5.0
I	13.0±2.0

Quantity: 2500PCS