REV.	ECN NO.	DESCRIPTION	DATE	DESIGN

Pb Process Capable

RoHS Compliant 2011/65/EU

HALOGEN Compliant Halogen Free

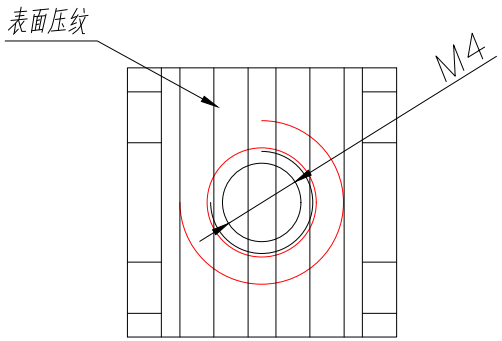

技术要求:

1.额定电流:40A

2.材质:黄铜 T1.0mm

3.表面处理:镀锡

4.牙孔规格:M3/M4

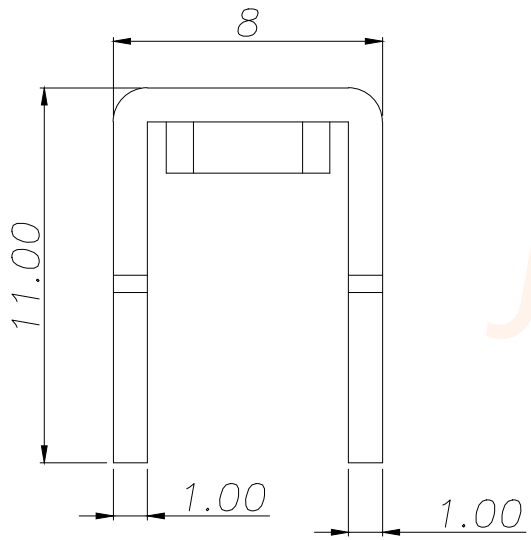

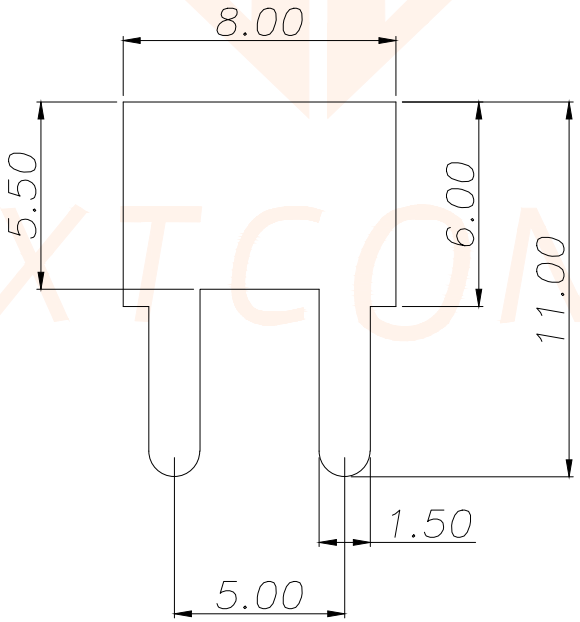

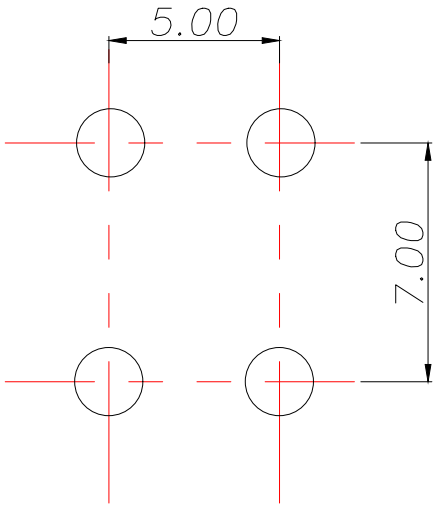

PCB.WELDING DRAWING
(TOLERANCE:±0.05)

JXTCONN

TOLERANCE		深圳聚兴泰电子科技有限公司 Shenzhen Juxingtai Electronic Technology Co., Ltd		
.X±0.30	X.°±5°	PART NO. JXT-M44008	TITLE: PCB SOLDERING TERMINAL	
.XX±0.25	X.X°±1°			
.XXX±0.15		DESIGN: Ethan	MANUFACTURE DWG	
UNITS	mm			
MATERILA	— — —	CHED: Olvia	SCALE N:A	SHEET 1/1
FINISH	— — —	APPD: Ava		