© 2022 TE Connectivity. All Rights Reserved.

REVISIONS					
P	LTR	DESCRIPTION	DATE	DWN	APVD
	A	INITIAL	09AUG2022	DW	CW
	A1	ECR-23-170694	29MAR2023	DW	CW
	A2	ECR-23-193537	27NOV2023	DW	CW
	B	ECR-25-237909	10JUN2025	ABS	RB

基本尺寸	<=6	>6-30	>30-50	>50-100	未注角度
公差	±0.1	±0.2	±0.3	±0.5	±0.5°

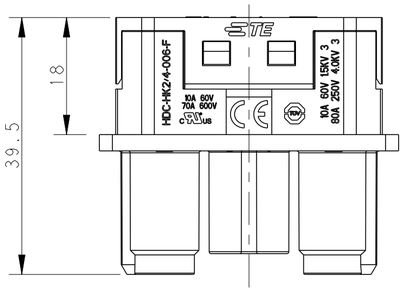

CERTIFICATION	PARAMETERS
Acc. to CUL(CNR)	POWER CURRENT:70A @AWG 6(16 mm²); SIGNAL CURRENT:10A @AWG 14(2.5 mm²); 电源电流:70A @AWG 6(16 mm²); 信号电流:10A @AWG 14(2.5 mm²)
Acc. to UL(USR)	POWER CURRENT:80A @AWG 6(16 mm²); SIGNAL CURRENT:3A @AWG 22(0.3 mm²); 电源电流:80A @AWG 6(16 mm²); 信号电流:3A @AWG 22(0.3 mm²)
Acc. to TUV	POWER CURRENT:70A @AWG 6(16 mm²); SIGNAL CURRENT:10A @AWG 14(2.5 mm²); 电源电流:70A @AWG 6(16 mm²); 信号电流:10A @AWG 14(2.5 mm²)

NOTES:
1. TECHNICAL CHARACTERISTICS:
   INSULATION MATERIAL: PC, BLACK
   RATING VOLTAGE: POWER:250V MAX.; SIGNAL:60V MAX.
   RATING CURENT: POWER:80A MAX.; SIGNAL:10A MAX.
   INSULATION RESISTANCE: >=400MΩ
   RATED IMPULSE VOLTAGE: POWER: 4.0KV
   SIGNAL:1.5KV
   POLLUTION DEGREE: 3
   MATING CYCLES: 30000 CYCLES
   WIRE RANGE:
   POWER: 10-16mm² (8-6AWG)
   SIGNAL: 0.14-2.5mm² (26-14AWG)
   CONTACT TYPE: CRIMP CONTACT
   FLOATING: 0.5mm GAP BETWEEN CUSTOMER STRUCTURE
   AND TE CONNECTOR FOR FLOATING

2. CONTACT NEED TO BE ORDERED SEPARATELY
   POWER CONTACT PN REFER TO DRAWING: T2400032XX0002
   SIGNALCONTACT PN REFER TO DRAWING: T20300320XX000

注释：
1. 技术参数：
   绝缘材料： PC，黑色
   额定电压： 电源:250V MAX.； 信号:60V MAX.
   额定电流： 电源:80A MAX.； 信号:10A MAX.
   绝缘电阻： >=400MΩ
   额定脉冲电压： 电源： 4.0KV； 信号： 1.5KV
   污染等级： 3
   插拔次数： 30000次
   接线范围：
   电源:10-16mm² (8-6AWG)
   信号： 0.14-2.5mm² (26-14AWG)
   接线类型： 冷压接
   浮动设置： 客户的结构和TE 连接器之间有0.5mm 的间隙作为浮动量.

2. 端子需要单独订购
   电源端子料号参考图面： T2400032XX0002
   信号端子料号参考图面： T20300320XX000

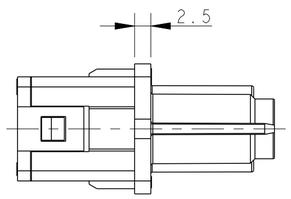

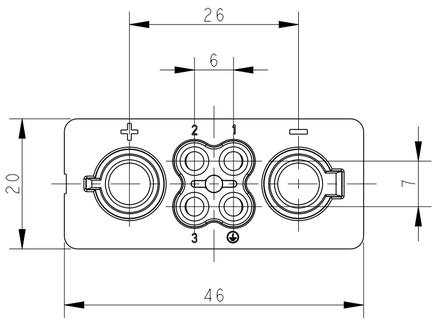

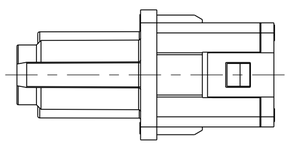

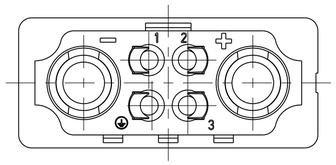

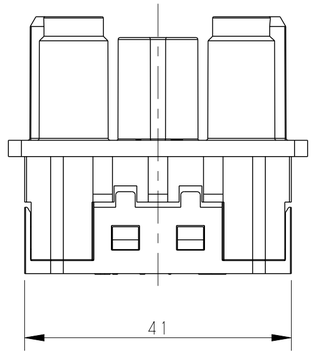

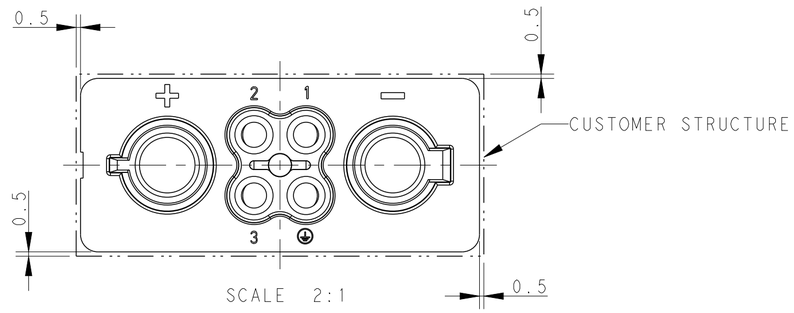

SCALE 2:1

FFLOATING FOR REFERENCE

PART NUMBER 产品料号	PART DESCRIPTION 产品描述	
T2120062201-001	HK2/4-006-F	HK2/4-006 FEMALE INSERT HK2/4-006 母插

THIS DRAWING IS A CONTROLLED DOCUMENT.

DIMENSIONS: mm

TOLERANCES UNLESS OTHERWISE SPECIFIED:
0 PLC ±-
1 PLC ±-
2 PLC ±-
3 PLC ±-
4 PLC ±-
ANGLES ±-

MATERIAL -
FINISH -

DWN DAVID WANG 28JUN2022
CHK GINO YAO 28JUN2022
APVD CHRIS WANG 28JUN2022
PRODUCT SPEC 108-137613
APPLICATION SPEC 114-137613
WEIGHT -

TE Connectivity

NAME HK2/4-006-F

SIZE	CAGE CODE	DRAWING NO	RESTRICTED TO
A2	00779	C-T2120062201001	-

CUSTOMER DRAWING | SCALE 3:2 | SHEET 1 OF 1 | REV B

1471-9 (3/13)