Diretive 2011/65/EU RoHS compliant

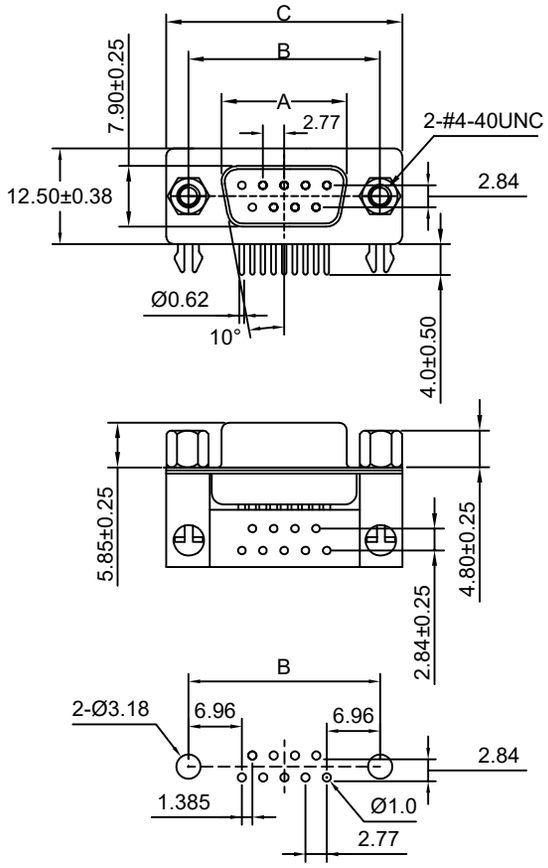

RECOMMENDED P.C.B LAYOUT

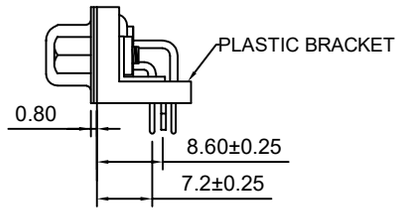

MATERIALS AND PLATINGS:

1. SHELL : SPCC MATERIAL, FRONT SHELL NICKEL FINISHED,BACK SHELL TIN FINISHED
2. INSULATOR : PBT THERMOPLASTIC, 30% GLASS FILLED,UL94V-0 RATED
3. CONTACT MATERIAL : BRASS
4. CONTACT FINISH : FULL GOLD FLASH(1u~50u optional)
5. STANDOFF BOARDLOCK: SPCC, TIN PLATED
6. FRONT FEMALE SCREWLOCK: SPCC, NICKEL PALTED
7. PLASTIC BRACKET:PBT+30% G.F
8. THREADED REAR INSERT:BRASS,NICKEL PLATED

ELECTRICAL DATAS:

1. CONTACT CURRENT RATING : 5.0 AMPS
2. CONTACT RESISTANCE : 20 MILLIOHMS MAX
3. DIELECTRIC WITHSTANDING VOLTAGE : 500 V AC MIN
4. INSULATION RESISTANCE : 5000 MEGAOHMS MIN
5. TEMPERATURE RATING : -55°C ~ +105°C

Contact	A±0.25	B±0.13	C±0.38	D±0.25
9	16.30	25.00	30.80	19.28
15	24.80	33.30	39.20	27.51
25	38.30	47.04	53.04	41.30
37	54.80	63.50	69.40	57.71

rev.	description	date	name
a	Original		

tolerance unless specified: ±0.13

dim. in mm

	date	name
drawn	09.03.21	
appd.	10.03.21	
norm		
d-old		

scale: 1:1

material: see above

创都电子科技

part no: DR-M-*P-YCLS-GK-90

DIN-A4

sh: 1/1