REV.	DESCRIPTION	DATE
A	RELEASE	Oct. 22, 2019
B	MODIFY PACKAGE	Jun. 08, 2020
C	MODIFY DRAW	Jul. 15, 2020

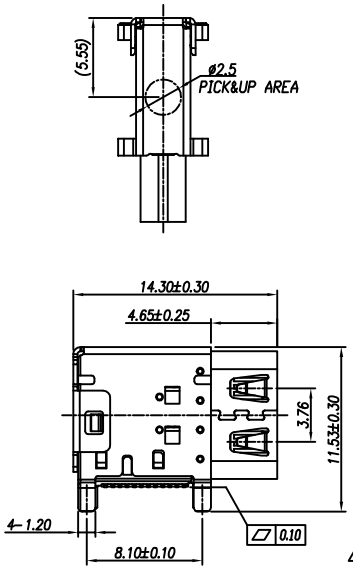

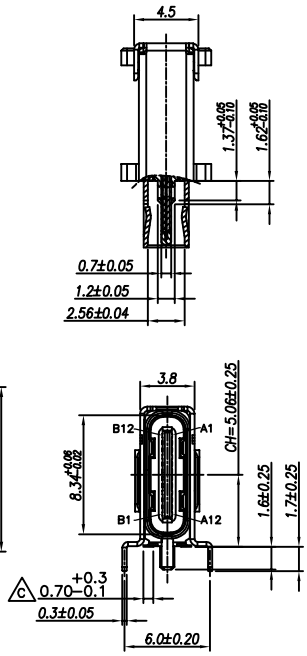

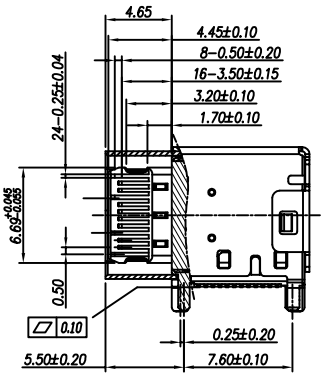

MATERIALS

1. HOUSING : LCP (UL 94V-0), BLACK.
2. TERMINAL : COPPER ALLOY,
   GOLD PLATED ON CONTACT AREA,
   GOLD FLASH PLATING ON SOLDER TAIL,
   NICKEL UNDERPLATED OVER ALL.
3. MID PLATE : STAINLESS STEEL.
4. SHELL : STAINLESS STEEL, NICKEL PLATING.

SPECIFICATION

1. CURRENT RATING : 5.0A FOR Vbus PIN,
   1.25A FOR Vconn PIN,
   0.25A FOR OTHER PINS.
2. VOLTAGE RATING : 20V DC MAX.
3. CONTACT RESISTANCE : 40mΩ.
4. INSULATION RESISTANCE : 100MΩ MIN.
5. DIELECTRIC WITHSTANDING VOLTAGE : 100 VAC MIN.
6. OPERATING TEMPERATURE : -40°C TO +85°C.
7. MATING FORCE : 5~20N.
8. UNMATING FORCE : 8~20N.
9. DURABILITY : 10,000 CYCLES.
10. RECOMMENDED PROCESS :
    THE PEAK TEMPERATURE ON THE BOARD SHALL
    MAINTAIN 260°C.

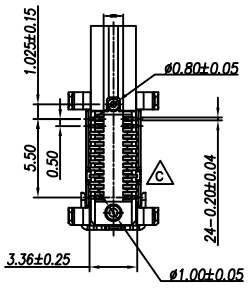

连兴旺电子(深圳)有限公司
LXWCONN ELECTRONICS(SHENZHEN)CO.,LTD

■Rohs ■HF	品名 TITLE: TYPE-C 侧贴24P 双外壳	比例 SCALE 1:1	图号 DWG NO.: TCB0003
TOLERANCE (UNLESS SPECIFIED) .0±0.30 .00±0.20 .000±0.10 / 0.°±10° .0°±8° .00°±5°	料号 ITEM NO:	张数 SHEET 1/1	
	审核 APPROVE BY: / 设计 DESIGN BY: L S W	版本 REV. 1	单位 UNITS: mm