www.dzyjzj.com Tel:0755-27575531 Fax:0755-27576267

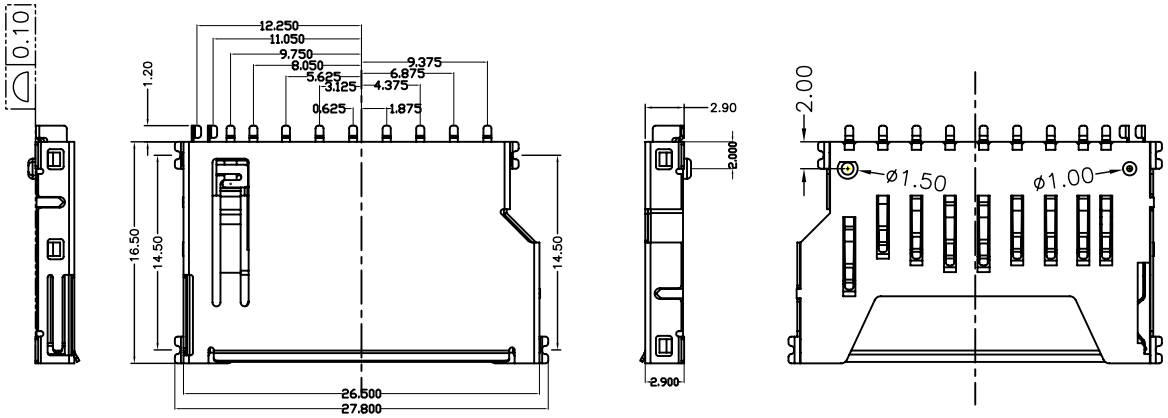

PIN NO.	NAME	DESCRIPTION
1#	CD/DAT3	CARD DETECT
2#	CMD	COMMAND
3#	VSS1	GROUND
4#	VDD	POWEER
5#	CLK	CLACK
6#	VSS2	GROUND
7#	DAT0	DATE I/O
8#	DAT1	DATE I/O
9#	DAT2	DATE I/O

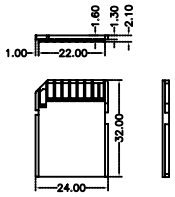

SD CARD

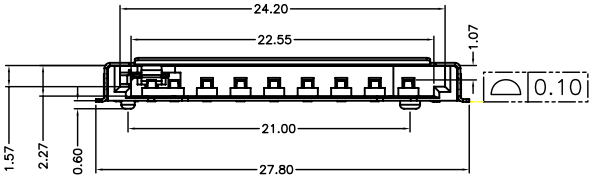

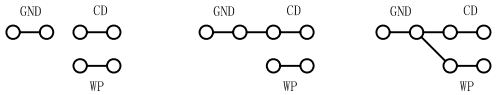

WITHOUT CAED

INSERTED CAED

INSERTED CAED
WP UNLOCK

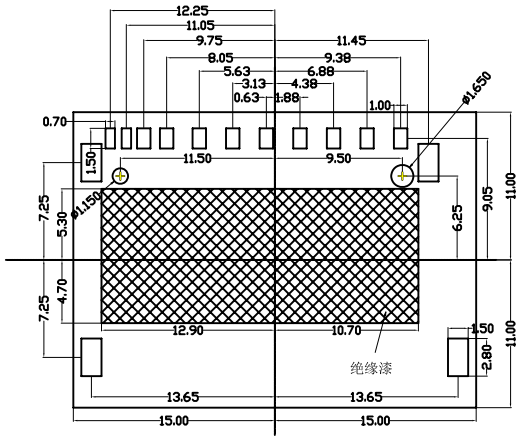

P.C.B LAYOUT
(TOLERANCE:±0.05)

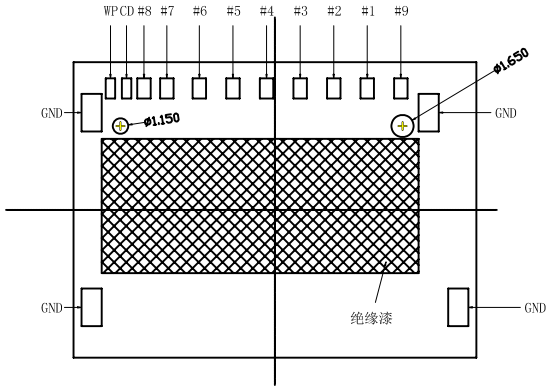

NOTES:

1.MATERIAL:
- HOUSING: HIGH TEMPERATURE THERMOPLASTIC UL94V_0,COLOR:WHITE.
- CONTACT: COPPER ALLOYS.
- COVER: COPPER ALLOYS.

2.PLATING:
- UNDERPLATE: NICKEL.
- CONTACT AREA: GOLD OVER NICKEL.
- SOLDER AREA: TIN OVER NICKEL.

3.MULTIMEDIA CARD COMPATIBLE

LXW 连兴旺电子(深圳)有限公司
LXWCONN ELECTRONICS(SHENZHEN)CO.,LTD

TOLERANCE: X.X ±0.30 X.XX ±0.25 X.XXX ±0.15 X.° ±2° X.X° ±0.5°	DRAWED BY : 陈一鸣	DATE : 2014-02-23	PART NAME: SD NO PUSH 短卡	
	CHECKED BY: 马跃	DATE : 2014-02-23	PART NO.	LXW-SD-0112
UNIT: mm [inch]	APPROVED BY: 邱敏	DATE : 2014-02-23	MOLD NO.	
			DRAW NO:	
SCALE:1:1	SIZE: A4		SHEET NO.	1 OF 1