# 3.3V to 5V, RS-485 / RS-422 Transceiver with Auto-Direction Control

## Features

- 3.3-V to 5.0-V Supply Voltage
- Auto Direction Enables Driver Automatically on Transmission
- Half-duplex Transceiver
- Data Rates:
  - COS13487E: 500kbps (Slew-Rate Limiting)
  - COS13488E: 12Mbps
- Low Power Consumption:
  - Quiescent Current During Operation:0.7mA
  - Standby Current <5uA
- -7V to 12V Bus Common Mode Input Range
- Open, Short, and Idle Fail-safe Functions
- Bus Glitch-Free Power-Up and Power-Down
- Over Temperature Protection
- ESD Protection for RS-485 I/O Pins
  - ±15kV—Human Body Model
  - ±8kV—IEC 1000-4-2, Contact Discharge
  - ±15kV—IEC 1000-4-2, Air-Gap Discharge
- 1/8-Unit Load, Allow Up to 256 Transceivers on the bus
- Small Packaging: SOP8/MSOP8/DFN8

## Applications

- Isolated RS-485 Interfaces
- Power Inverters
- Motor Control
- Industrial Automation
- Battery-Powered Applications

## General Description

The COS13487E and COS13488E are low power differential bus/line transceivers with fail-safe and hot-swap features designed for multi-point data transmission standard and RS485 applications. They operate from a single 3.3 to 5.0V supply and also meets the requirements of RS422.

The COS13487E/COS13488E family feature auto-directional control, where the driver input is used in conjunction with the driver-enable signal to drive the differential bus. This architecture makes the devices ideal for isolated RS-485 applications.

The COS13487E allow error-free transmission up to 500kbps. The COS13488E driving slew rate is not limited, allowing transmit speeds up to 12Mbps. The devices offer significant power saving without sacrificing ruggedness against overload or ESD damage. It is available in 8-lead plastic SOP8, MSOP8, and DFN3x3-8, and is specified for operation from –40°C to +125°C ambient temperature.

Rev1.5

Copyright@2018 Cosine Nanoelectronics Inc. All rights reserved
The information provided here is believed to be accurate and reliable. Cosine Nanoelectronics assumes no reliability for inaccuracies and omissions. Specifications described and contained here are subjected to change without notice on the purpose of improving the design and performance. All of this information described herein should not be implied or granted for any third party.

## 1. Pin Configuration and Functions

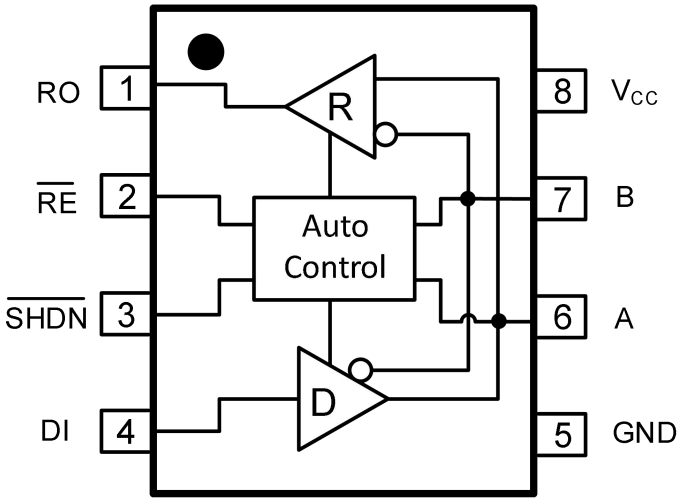


Figure 1 Pin Diagram

Pin Description

| Pin | Name | Description |
|---|---|---|
| 1 | RO | Receiver output.<br>When the receiver output is enabled ($\overline{RE}$ low), then if A > B by 200mV, RO will be high. If A < B by 200mV, then RO will be low. |
| 2 | $\overline{RE}$ | Receiver output enable.<br>A low enables the receiver output, RO. A high input to let the auto-direction circuit control the receiver. $\overline{RE}$ is a hot-swap input. |
| 3 | $\overline{SHDN}$ | Shutdown.<br>Drive $\overline{SHDN}$ low to put the device in shutdown mode. Drive $\overline{SHDN}$ high to let the device operate in normal operation. |
| 4 | DI | Driver input.<br>Drive DI low to force non-inverting output low and inverting output high. Drive DI high to force non-inverting output high and inverting output low. DI is an input to the internal state machine that automatically enables and disables the driver. |
| 5 | GND | Ground |
| 6 | A | Non-inverting receiver input and non-inverting driver output |
| 7 | B | Inverting receiver input and inverting driver output |
| 8 | Vcc | Power Supply, 3-V to 5.5-V. Bypass $V_{CC}$ to GND with a 0.1μF capacitor. |

Driver Truth Table

| Inputs | | | Outputs | | Function |
|---|---|---|---|---|---|
| $\overline{SHDN}$ | DI | A-B > $V_{DT}$ | A | B | |
| H | L | X | L | H | Turn driver ON |
| H | H | True | Z | Z | Turn driver OFF |
| H | H | False | Z | Z | If driver was OFF, keep it OFF |
| H | H | False | H | L | If driver was ON, keep it ON |
| L | X | X | Z | Z | Shutdown |

Receiver Truth Table

| Inputs | | | | | Outputs |
|---|---|---|---|---|---|
| $\overline{SHDN}$ | $\overline{RE}$ | A-B | Driver State | Receiver State | RO |
| H | L | ≥ +0.2V | X | ON | H |
| H | L | ≤ -0.2V | X | ON | L |
| H | H | X | ON | OFF | Z |
| H | H | ≥ +0.2V | OFF | ON | H |
| H | H | ≤ -0.2V | OFF | ON | L |
| L | X | X | X | X | Z |

Note: X = Don't care; Z = High impedance

## 2. Product Specification

### 2.1 Absolute Maximum Ratings (1)

| Parameter | Min | Max | Unit |
|---|---|---|---|
| DC supply voltage, Vcc | | +6 | V |
| Control input voltages | -0.5 | Vcc + 0.5 | V |
| Driver input voltages | -0.5 | Vcc + 0.5 | V |
| Driver output voltage at A or B | | ±16 | V |
| Receiver input voltage | | ±16 | V |
| Receiver output voltage | -0.5 | Vcc + 0.5 | V |
| Operating junction temperature | -40 | +135 | °C |
| Storage temperature | -55 | +150 | °C |

(1) Stresses exceeding the absolute maximum ratings may damage the device. The device may not function or be operable above the recommended operating conditions and stressing the parts to these levels is not recommended. In addition, extended exposure to stresses above the recommended operating conditions may affect device reliability. The absolute maximum ratings are stress ratings only.

## 2.2 Thermal Data

| Parameter | Rating | Unit |
|---|---|---|
| Package Thermal Resistance, $R_{\theta JA}$ (Juntion-to-ambient) | 150 (SOP8)<br>206 (MSOP8)<br>57 (DFN8,3x3) | °C/W |

## 2.3 ESD Rating

| ESD Protection | Conditions | Rating | Unit |
|---|---|---|---|
| Bus terminals (A,B) | Air Gap Discharge IEC61000-4-2 | ±15 | kV |
| | Human Body Model | ±15 | |
| All Other Pins | Human Body Model | ±2 | |

## 2.4 Recommended Operating Conditions

| Parameter | Min. | Typ. | Max. | Unit |
|---|---|---|---|---|
| DC Supply voltage | 3.0 | 5 | 5.5 | V |
| Input voltage at any bus terminal | -7 | | 12 | V |
| Differential input voltage | -12 | | 12 | V |
| Differential load resistance | 54 | 60 | | Ω |
| Data rate: (COS13487E) | | | 500 | kbps |
| Data rate: (COS13488E) | | | 12 | Mbps |
| Operating ambient temperature | -40 | | +85 | °C |
| Operating junction temperature | -40 | | +125 | °C |

## 2.5 Electrical Characteristics

(Typical values are at $T_A$=25 ºC, $V_{CC}$=5V, unless otherwise noted.)

| Parameter | Symbol | Conditions | Min. | Typ. | Max. | Unit |
|---|---|---|---|---|---|---|
| **Driver Electrical Characteristics** | | | | | | |
| Differential driver output (no load) | $V_{OD1}$ | $I_O$ = 0 | 2.0 | | $V_{CC}$ | V |
| Differential driver output (with load) | $V_{OD2}$ | $R_{DIFF}$ = 100Ω (RS422)<br>$R_{DIFF}$ = 54Ω (RS485),<br>(See Figure 2) | 2.0<br>1.5 | | | V |
| Change in magnitude of driver differential output voltage for complementary output states | $\Delta V_{OD}$ | $R_{DIFF}$ = 54Ω or 100Ω,<br>(See Figure 2) | -0.2 | 0 | 0.2 | V |
| Driver common-mode output voltage | $V_{OC}$ | $R_{DIFF}$ = 54Ω or 100Ω,<br>(See Figure 2) | | $V_{CC}$/2 | 3 | V |
| Change in magnitude of driver common-mode output voltage for complementary output states | $\Delta V_{OC}$ | $R_{DIFF}$ = 54Ω or 100Ω,<br>(See Figure 2) | | | 0.2 | V |
| Driver disable threshold | $V_{DT}$ | | +0.6 | | +1.0 | V |
| Driver short-circuit current | $I_{OS}$ | $V_O$ = -7V to 12V,<br>(See Figure 2) | -250 | | 250 | mA |
| **Receiver Electrical Characteristics** | | | | | | |
| Receiver differential threshold voltage | $V_{TH}$ | $V_{CM}$ = -7V to 12V | -200 | -125 | -50 | mV |
| Receiver input hysteresis | $\Delta V_{TH}$ | $V_{CM}$ = 0V | | 40 | | mV |
| Receiver input resistance | $R_{IN}$ | $V_{CM}$ = -7V to 12V | 96 | | | kΩ |
| Input current (A, B) | $I_{IN}$ | ($V_{CC}$ = 0V or 5V, $V_{DE}$ = 0V)<br>$V_{IN}$ = 12V<br>$V_{IN}$ = -7V | | | +200<br>-200 | μA |
| Receiver output high voltage | $V_{OH}$ | $I_O$ = -4mA | $V_{CC}$ -0.4 | $V_{CC}$ -0.2 | | V |
| Receiver output low voltage | $V_{OL}$ | $I_O$ = 4mA | | 0.2 | 0.4 | V |
| Receiver output short-circuit current | $I_{OSR}$ | $V_O$ = 0V to Vcc | | | ±60 | mA |
| Tristate output leakage current | $I_{OZR}$ | $V_O$ = 0.4 to 2.4V | -1 | | 1 | μA |

| | | | | | | |
|---|---|---|---|---|---|---|
| **Logic** | | | | | | |
| Logic Input high voltage | $V_{IH}$ | DI, $\overline{RE}$, $\overline{SHDN}$ | 2.0 | | | V |
| Logic Input low voltage | $V_{IL}$ | DI, $\overline{RE}$, $\overline{SHDN}$ | | | 0.8 | V |
| Logic Input current | $I_{IN1}$ | DI, $\overline{RE}$, $\overline{SHDN}$ | | | ±5 | μA |
| **Supply Current and Power Dissipation Characteristics** | | | | | | |
| Supply current (quiescent) | $I_{CC}$ | $\overline{SHDN}$=$V_{CC}$, $\overline{RE}$=0, no Load | | 770 | 900 | μA |
| Shutdown current | $I_{SHDN}$ | $\overline{SHDN}$=0 | | 3 | 10 | μA |
| Average power dissipation | $P_{AVG}$ | Unterminated; Data rate=500kbps, 50% duty cycle, $R_L$ = 150Ω, $C_L$ =50pF | | 75 | | mW |
| | | RS-422; Data rate=500kbps, 50% duty cycle, $R_{DIFF}$ = 100Ω, $C_L$ =50pF | | 150 | | |
| | | RS-485; Data rate=500kbps, 50% duty cycle, $R_{DIFF}$ = 54Ω, $C_L$ = 50pF | | 215 | | |
| Thermal shutdown junction temperature | $T_{SD}$ | | 150 | 170 | | °C |
| Thermal shutdown hysteresis | $T_{HYS}$ | | | 30 | | °C |

## 2.6 Switching Characteristics - COS13487E

(Typical values are at $T_A$=25 °C, $V_{CC}$=5V, unless otherwise noted.)

| Parameter | Symbol | Conditions | Min. | Typ. | Max. | Unit |
|---|---|---|---|---|---|---|
| **Driver** | | | | | | |
| Propagation delay input to output, low to high | $t_{PLH}$, | $R_L$ = 110Ω, $C_L$ = 50pF, (See Figure 3) | | 70 | 200 | ns |
| Propagation delay input to output, high to low | $t_{PHL}$ | | | 70 | 200 | ns |
| Output to output skew, $\lvert t_{PHL} – t_{PLH}\rvert$ | $t_{SK}$ | | | | 15 | ns |
| Differential output rise or fall time | $t_r$, $t_f$ | | 100 | 250 | 400 | ns |

| | | | | | | |
|---|---|---|---|---|---|---|
| Enable to output high | $t_{PZH}$ | $C_L$ = 100pF, $S_2$ = Closed (See Figure 4 and Figure 5) | | 120 | 200 | ns |
| Enable to output low | $t_{PZL}$ | $C_L$ = 100pF, $S_1$ = Closed (See Figure 4 and Figure 5) | | 50 | 100 | ns |
| Disable time from low | $t_{PLZ}$ | $C_L$ = 15pF, $S_1$ = Closed (See Figure 4 and Figure 5) | | 120 | 200 | ns |
| Disable time from high | $t_{PHZ}$ | $C_L$ = 15pF, $S_2$ = Closed (See Figure 4 and Figure 5) | | 50 | 100 | ns |
| Maximum data rate | $f_{MAX}$ | | 500 | | | kbps |
| **Receiver** | | | | | | |
| Propagation delay input to output, low to high | $t_{PLH}$ | $R_{DIFF}$ = 54Ω, $C_{RL}$ = 100pF, (See Figure 6 ) | | 25 | 50 | ns |
| Propagation delay input to Output, high to low | $t_{PHL}$ | | | 25 | 50 | ns |
| Output to output skew, $\lvert t_{PHL} – t_{PLH}\rvert$ | $t_{SK}$ | | | | 5 | ns |
| Enable to output high | $t_{PZH}$ | $C_{RL}$ = 15pF, S1 = Closed (See Figure 7 and Figure 8) | | 50 | 70 | ns |
| Enable to output low | $t_{PZL}$ | $C_{RL}$ = 15pF, S2 = Closed (See Figure 7 and Figure 8) | | 10 | 50 | ns |
| Disable time from low | $t_{PLZ}$ | $C_{RL}$ = 15pF, S1 = Closed (See Figure 7 and Figure 8) | | 15 | 40 | ns |
| Disable time from high | $t_{PHZ}$ | $C_{RL}$ = 15pF, S2 = Closed (See Figure 7 and Figure 8) | | 20 | 50 | ns |
| Maximum data rate | $f_{MAX}$ | | 500 | | | kbps |

## 2.7 Switching Characteristics - COS13488E

(Typical values are at $T_A$=25 ºC, $V_{CC}$=5V, unless otherwise noted.)

| Parameter | Symbol | Conditions | Min. | Typ. | Max. | Unit |
|---|---|---|---|---|---|---|
| **Driver** | | | | | | |
| Propagation delay input to output, low to high | $t_{PLH,}$ | $R_L$ = 110Ω, $C_L$ = 50pF (See Figure 3) | | | 50 | ns |
| Propagation delay input to output, high to low | $t_{PHL}$ | | | | 50 | ns |
| Output to output skew, $\lvert t_{PHL} – t_{PLH}\rvert$ | $t_{SK}$ | | | | 5 | ns |
| Differential output rise or fall time | $t_r$, $t_f$ | | | | 15 | ns |

| | | | | | | |
|---|---|---|---|---|---|---|
| Enable to output high | $t_{PZH}$ | $C_L$ = 100pF, $S_2$ = Closed (See Figure 4 and Figure 5) | | | 70 | ns |
| Enable to output low | $t_{PZL}$ | $C_L$ = 100pF, $S_1$ = Closed (See Figure 4 and Figure 5) | | | 70 | ns |
| Disable time from low | $t_{PLZ}$ | $C_L$ = 15pF, $S_1$ = Closed (See Figure 4 and Figure 5) | | | 50 | ns |
| Disable time from high | $t_{PHZ}$ | $C_L$ = 15pF, $S_2$ = Closed (See Figure 4 and Figure 5) | | | 50 | ns |
| Maximum data rate | $f_{MAX}$ | | | | 12 | Mbps |
| **Receiver** | | | | | | |
| Propagation delay input to output, low to high | $t_{PLH}$ | $R_{DIFF}$ = 54Ω, $C_{RL}$ = 100pF, (See Figure 6 ) | | | 75 | ns |
| Propagation delay input to Output, high to low | $t_{PHL}$ | | | | 75 | ns |
| Output to output skew, $\lvert t_{PHL} - t_{PLH} \rvert$ | $t_{SK}$ | | | | 5 | ns |
| Enable to output high | $t_{PZH}$ | $C_{RL}$ = 15pF, S1 = Closed (See Figure 7 and Figure 8) | | | 50 | ns |
| Enable to output low | $t_{PZL}$ | $C_{RL}$ = 15pF, S2 = Closed (See Figure 7 and Figure 8) | | | 50 | ns |
| Disable time from low | $t_{PLZ}$ | $C_{RL}$ = 15pF, S1 = Closed (See Figure 7 and Figure 8) | | | 25 | ns |
| Disable time from high | $t_{PHZ}$ | $C_{RL}$ = 15pF, S2 = Closed (See Figure 7 and Figure 8) | | | 25 | ns |
| Maximum data rate | $f_{MAX}$ | | | | 12 | Mbps |

## 3. Testing Circuits and Parameter Information

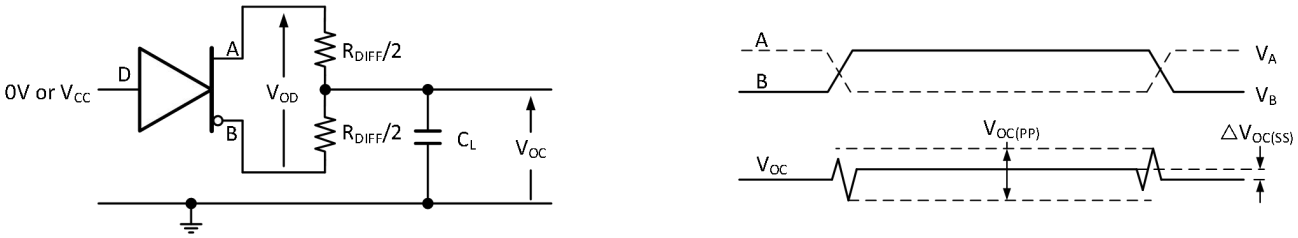


Figure 2. Measurement of Driver Differential and Common-Mode Output with RS-485 Load

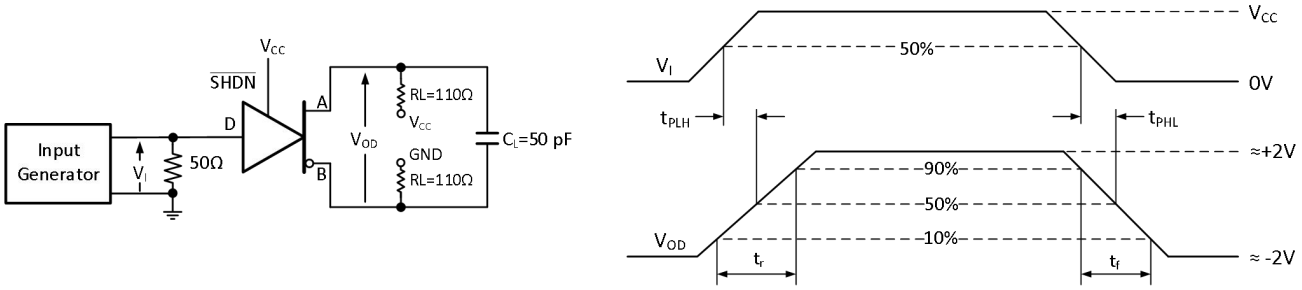


Figure 3. Measurement of Driver Differential Output Rise and Fall Times and Propagation Delays

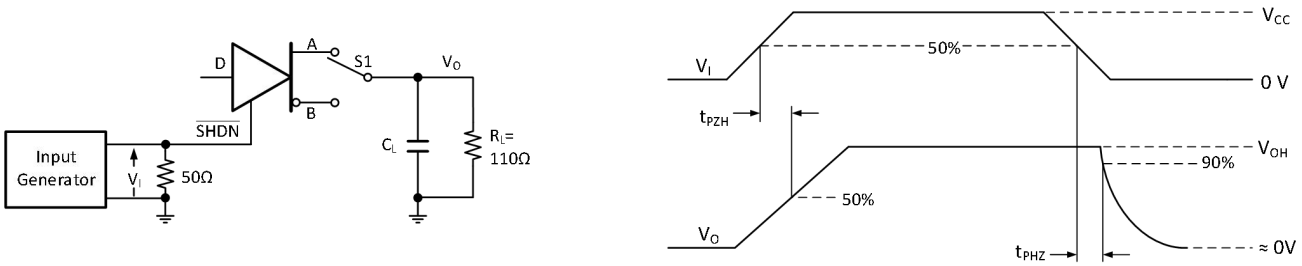


Figure 4. Measurement of Driver Enable and Disable Times with Active High Output and Pull-Down Load

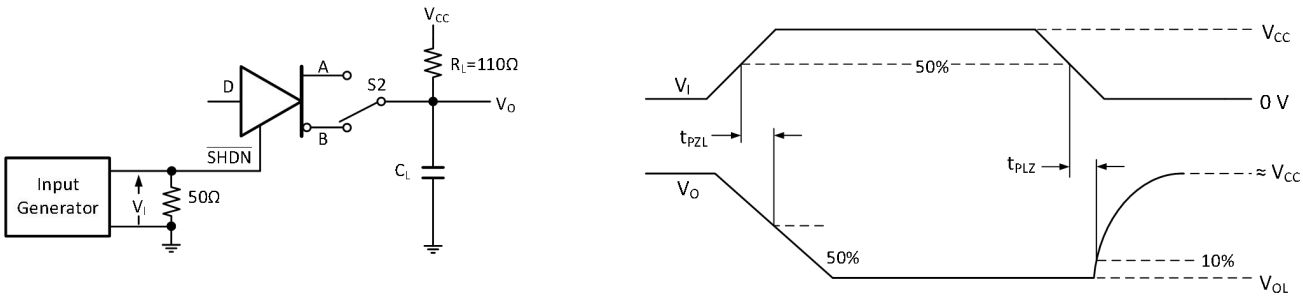


Figure 5. Measurement of Driver Enable and Disable Times with Active Low Output and Pull-up Load

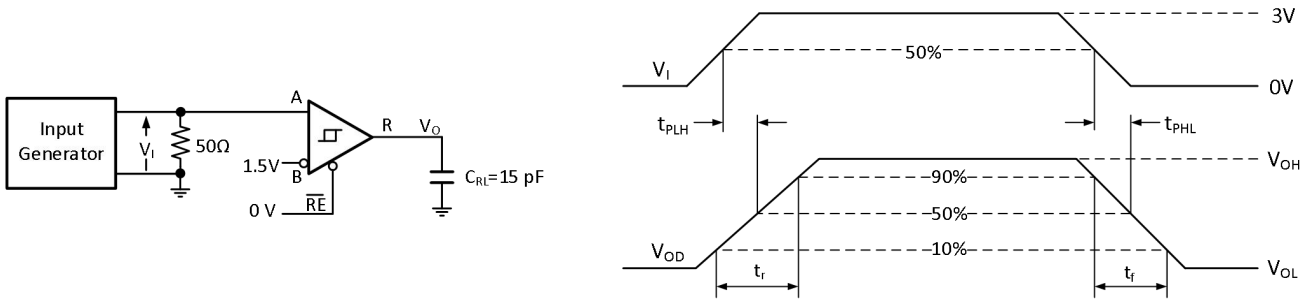


Figure 6. Measurement of Receiver Output Rise and Fall Times and Propagation Delays

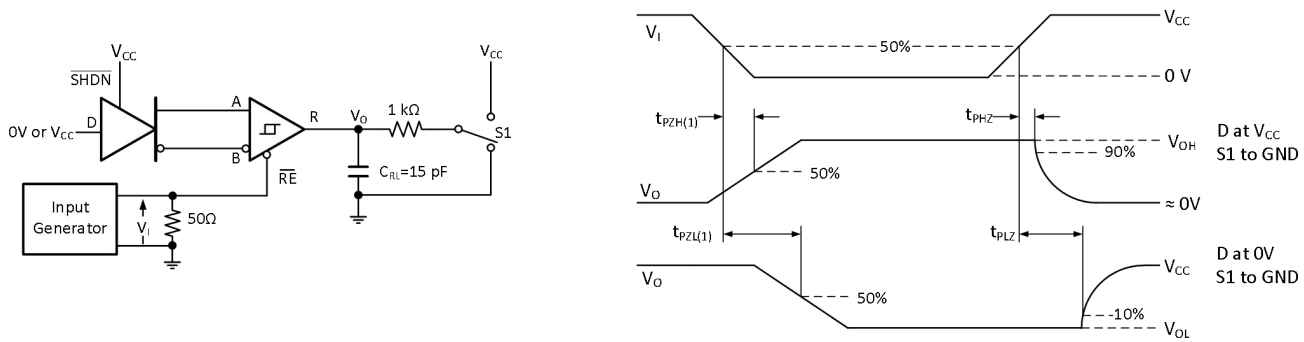


Figure 7. Measurement of Receiver Enable/Disable Times with Driver Enabled

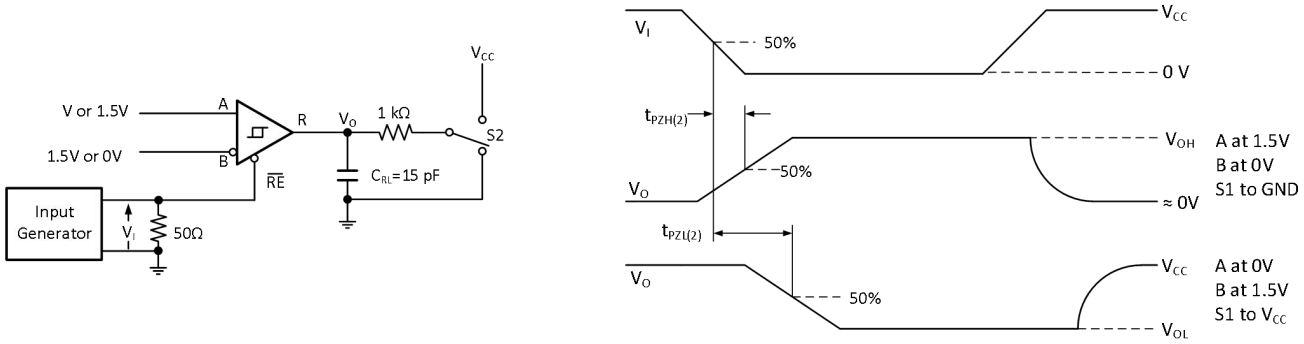


Figure 8. Measurement of Receiver Enable Times with Driver Disabled

## 4. Typical Application

**Isolated RS-485 Interface**

The COS13487E/COS13488E devices are low-power half-duplex RS-485 transceiver suitable for data transmission at rates up to 12 Mbps over controlled-impedance transmission media (such as twisted-pair cabling). Figure 9 shown an isolated RS-485 Interface using the COS13487E /COS13488E. The transceiver is powered separately from the controlling circuitry. The Auto-direction feature of the COS13487E/COS13488E, replaces an external relay allowing faster switching speeds, no contact bounce, better reliability, and better electrical isolation. The COS13487E/COS13488E only require two opto-couplers to electrically isolate the transceiver.

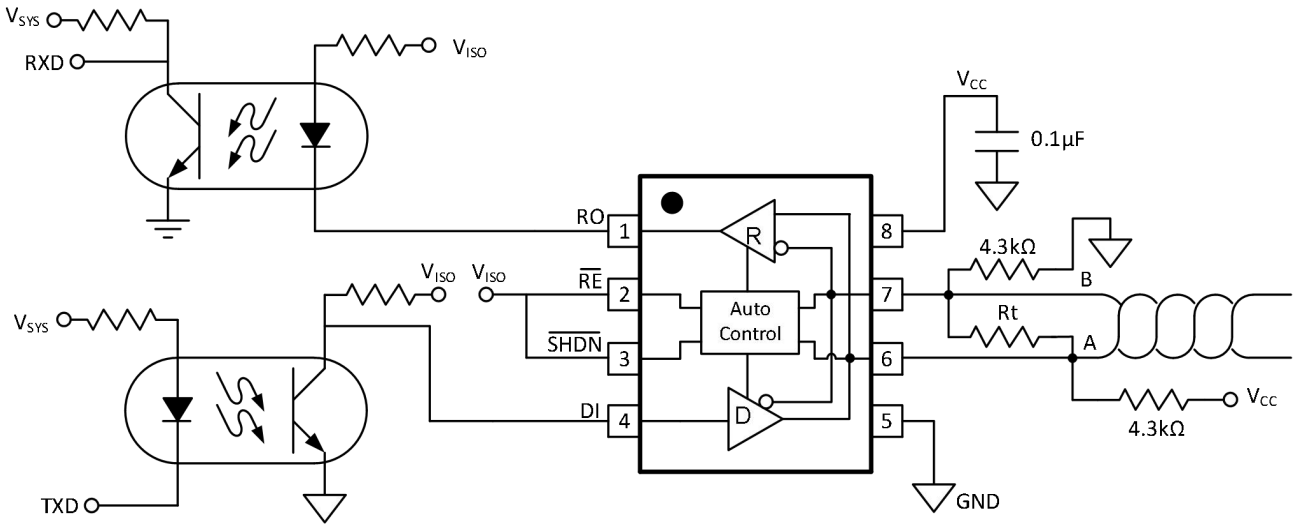


Figure 9. Isolated RS-485 Interface

**Auto-Direction Control**

Internal circuitry in the COS13487E/COS13488E, in conjunction with an external pullup resistor on A and pulldown resistor on B, act to automatically disable or enable the driver and receiver to keep the bus in the correct state. This Auto-direction circuitry consists of a state machine that determines whether this device is trying to drive the bus, or another node on the network is driving the bus. When DI is low, the device always drives the bus low. When DI is high, the device drives the bus for a short time, then disables the driver and allows the external pullup/pulldown resistors to hold the bus in the high state (A-B > 200mV). During each low-to-high transition of DI, the driver stays enabled until (A-B) > $V_{DT}$, and then disables the driver, letting the pullup/pulldown resistors hold the A and B lines in the correct state.

**Pullup and Pulldown Resistor**

The pullup and pulldown resistors on the A and B lines are required for proper operation of the device although their exact value is not critical. They function to hold the bus in the high state (A-B > 200mV) following a low-to-high transition. Sizing of these resistors is determined in the same way as when using any other RS-485 driver and depends on how the line is terminated and how many nodes are on the bus. **The most important factor when sizing these resistors is to guarantee that the idle voltage on the bus (A-B) is greater than 200mV in order to remain compatible with standard RS-485 receiver thresholds.**

**Idle State**

When not transmitting data, the COS13487E/COS13488E require the DI input be driven high to remain in the idle state. A conventional RS-485 transceiver has DE and RE inputs that are used to enable and disable the driver and receiver. However, the COS13487E/COS13488E does not have a DE input, and instead uses an internal state machine to enable and disable the drivers. DI must be driven high in order to go to the idle state.

**Multi-point Transmission Networks**

Up to 256 units of the COS1348x device can share a common RS-485 bus due to the low bus-input currents of the device. A typical application showing a multi-point transmission network is illustrated in Figure 10. Only one driver can transmit at a particular time, but multiple receivers may be enabled simultaneously. As with any transmission line, it is important that reflections are minimized. This can be achieved by terminating the extreme ends of the line using resistors equal to the characteristic impedance of the line. Stub lengths off the main line must also be kept as short as possible. A properly terminated transmission line appears purely resistive to the driver.

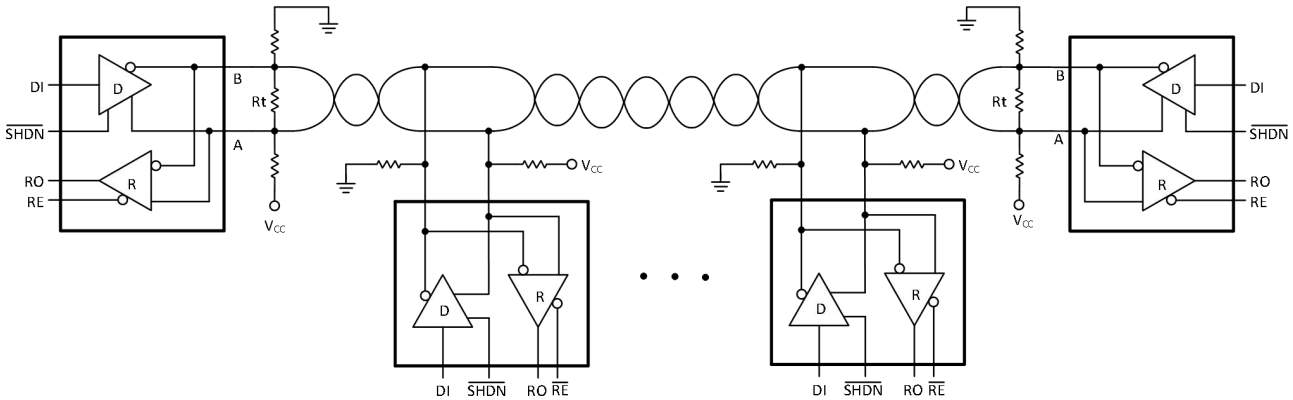


Figure 10. Multi-point Transmission Networks

# 5. Package Information

## 5.1 SOP8 (Package Outline Dimensions)

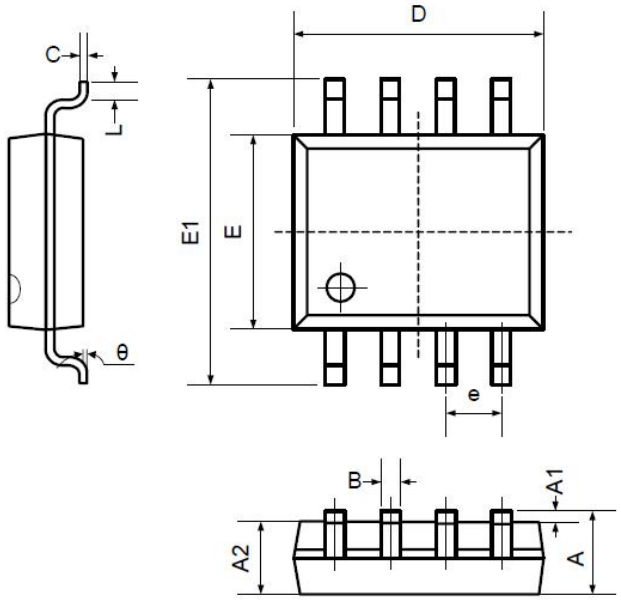


| Symbol | Dimensions In Millimeters | | Dimensions In Inches | |
|---|---|---|---|---|
| | Min | Max | Min | Max |
| A | 1.350 | 1.750 | 0.053 | 0.069 |
| A1 | 0.100 | 0.250 | 0.004 | 0.010 |
| A2 | 1.350 | 1.550 | 0.053 | 0.061 |
| B | 0.330 | 0.510 | 0.013 | 0.020 |
| C | 0.190 | 0.250 | 0.007 | 0.010 |
| D | 4.780 | 5.000 | 0.188 | 0.197 |
| E | 3.800 | 4.000 | 0.150 | 0.157 |
| E1 | 5.800 | 6.300 | 0.228 | 0.248 |
| e | 1.270TYP | | 0.050TYP | |
| L | 0.400 | 1.270 | 0.016 | 0.050 |
| θ | 0° | 8° | 0° | 8° |

## 5.2 MSOP8 (Package Outline Dimensions)

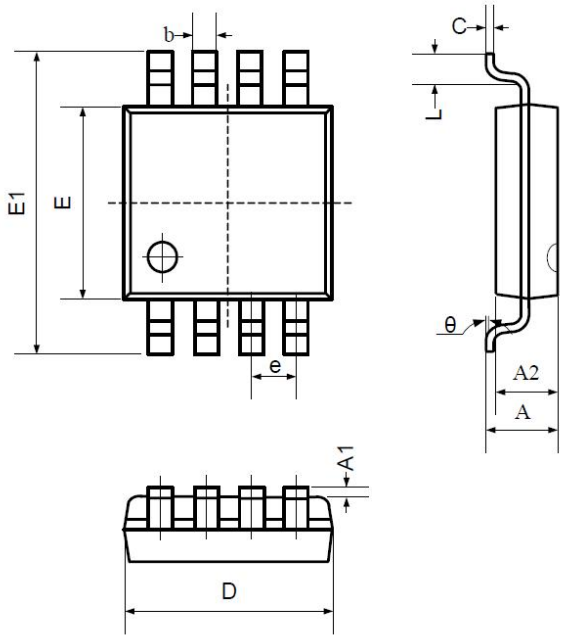


| Symbol | Dimensions In Millimeters | | Dimensions In Inches | |
|---|---|---|---|---|
| | Min | Max | Min | Max |
| A | 0.800 | 1.200 | 0.031 | 0.047 |
| A1 | 0.000 | 0.200 | 0.000 | 0.008 |
| A2 | 0.760 | 0.970 | 0.030 | 0.038 |
| b | 0.30 TYP | | 0.012 TYP | |
| c | 0.15 TYP | | 0.006 TYP | |
| D | 2.900 | 3.100 | 0.114 | 0.122 |
| e | 0.65 TYP | | 0.026 TYP | |
| E | 2.900 | 3.100 | 0.114 | 0.122 |
| E1 | 4.700 | 5.100 | 0.185 | 0.201 |
| L | 0.410 | 0.650 | 0.016 | 0.026 |
| θ | 0° | 6° | 0° | 6° |

## 6. Ordering Information

| Model | Order Number | Package | Package Option | Marking Information |
|---|---|---|---|---|
| COSMAX13487E | COSMAX13487EESA | SOP-8 | Tape and Reel, 4000 | COS13487E |
| | COSMAX13487EM | MSOP-8 | Tape and Reel, 3000 | COS13487E |
| | COSMAX13487EF | DFN3x3-8 | Tape and Reel, 4000 | COS13487E |
| COSMAX13488E | COSMAX13488EESA | SOP-8 | Tape and Reel, 4000 | COS13488E |
| | COSMAX13488EM | MSOP-8 | Tape and Reel, 3000 | COS13488E |
| | COSMAX13488EF | DFN3x3-8 | Tape and Reel, 4000 | COS13488E |