SAMZO | REAC/ROHS

REV	ECN NO	DESRIPTION	DESIGN	APPROVAL	DATE
A1	NEW	Replace frame			2018.06.14

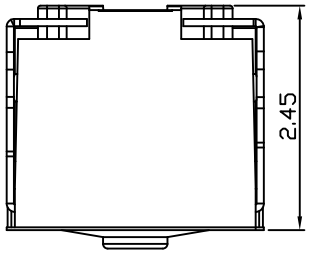

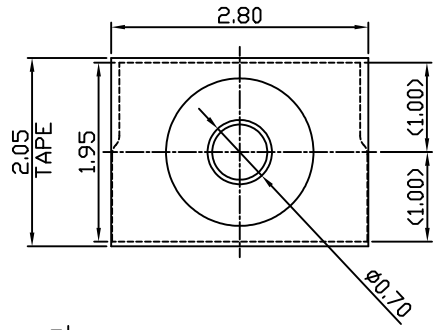

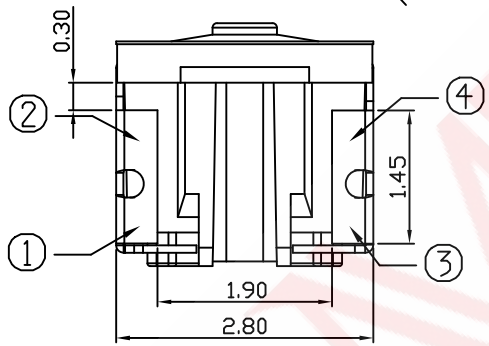

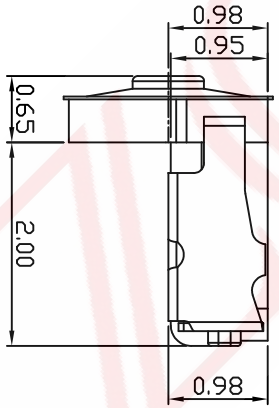

主要技术参数、性能
The Main Thchnology Performance

额定电流、电压 Rate voltage.current	20mA DC15V
接触电阻 Contact resistance	≤100mΩ
按力 Operating force	160±50gf
寿命 Lifetime	300,000 Times
绝缘电阻 Insulated resistance	≥100MΩ
介电强度 Dielectric strength	≥250VAC/1min

A2 6 G 65 1 1 1 0

Ⓐ Ⓑ Ⓒ Ⓓ Ⓔ Ⓕ Ⓖ Ⓗ

A.系列:A2-2.0*2.8系列
B.贴装方式:6-卧式沉板
C.规格:G-4P
D.操作高度:65-0.65mm
E:操作力度:1-160gf
F:操作寿命:1-300,000次
G:固定方式:1-无柱
H:物料编码:0-常规(确认待编)

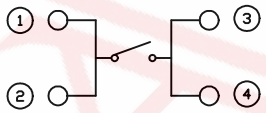

CIRCUIT

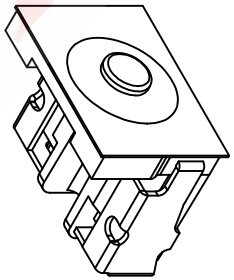

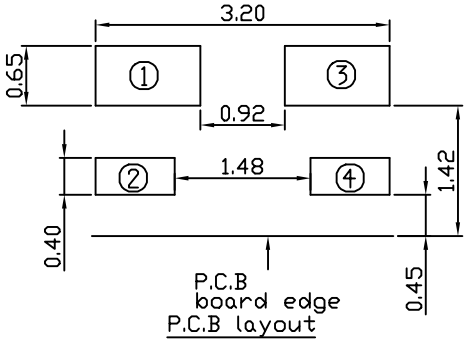

ITEM	DESCRIPTION	MATERIAL	QTY	FINSH/COLOR					
5	按钮	聚酰亚胺	1	红褐色				GENERAL TOLERANCE	
4	防尘膜	聚酰亚胺	1	透明				≥0~2<	±0.15
3	弹片	不锈钢	1	镀银	DESIGN	WANGGUIFA	2018.06.12	≥2~5<	±0.25
2	塑件	LCP	1	黑色	CHECKED	ZHENGUILAN	2018.06.12	≥0~2<	±0.15
1	端子	磷青铜	1	镀银	APPROVED	LILIANJIANG	2018.06.14	≥5	±0.35

FIRST VIEW

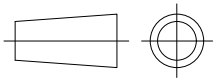

SCALE	1:1	UNIT	mm

The copyright belongs to samzo parts [China] Co., Ltd. please use the material after samzo parts agree to authorize. The final right of interpretation belongs to samzo parts.
WWW.KKK-JP.COM

SAMZO COMPONENTS
Electronic switch and connector manufacturer

TITLE:: 2.0*2.8*0.65mm 4P-LT
DWG NO: A26G-P070
PART NO: A26G180903
MODEL NO: A26G651110
NAME: TACT SWITCH