THIS DRAWING IS UNPUBLISHED. RELEASED FOR PUBLICATION 20
© COPYRIGHT 20 BY - ALL RIGHTS RESERVED.

REVISIONS

P	LTR	DESCRIPTION	DATE	DWN	APVD
	A4	ECN-23-192592	05JAN23	Y.Y	J.Z
	A5	ECN-23-196290	01FEB23	C.J	J.Z
	A6	ECN-24-294860	22NOV24	T.J	J.Z

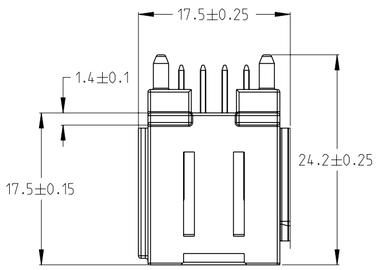

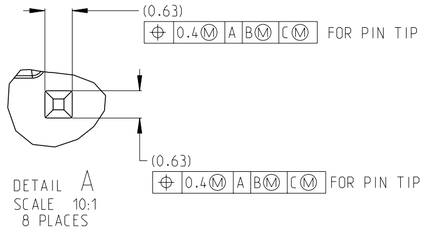

DETAIL A
SCALE 10:1
8 PLACES

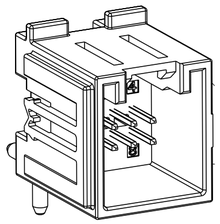

ISOMETRIC VIEW
SCALE 2:1

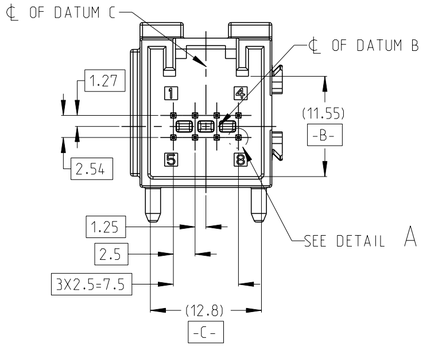

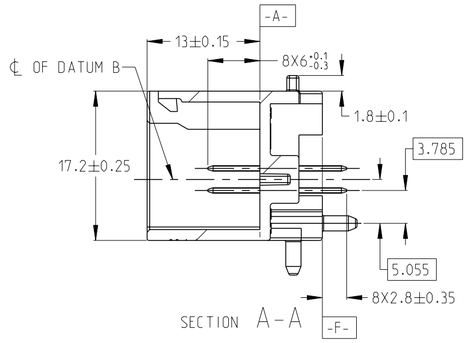

SECTION A-A

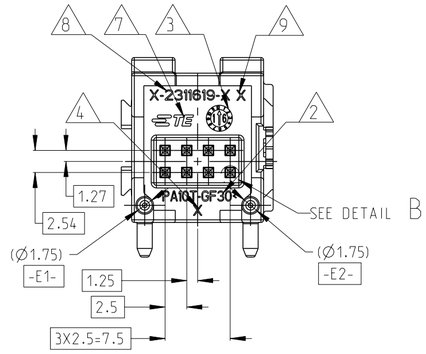

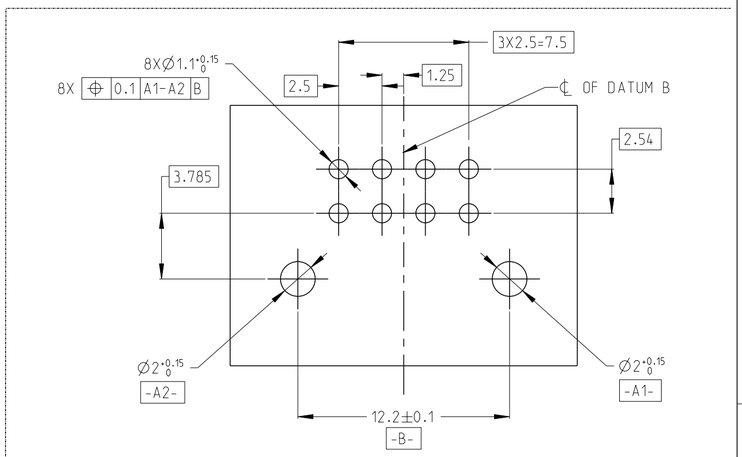

RECOMMENDED PCB LAY-OUT
THICKNESS 1.6±0.14mm

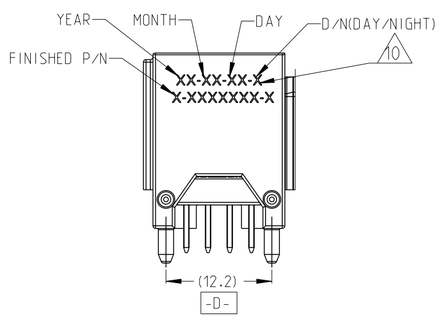

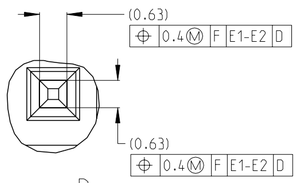

DETAIL B
SCALE 10:1
8 PLACES

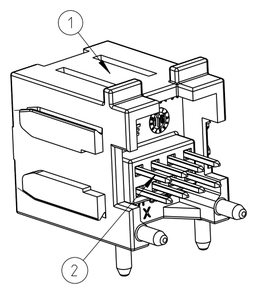

ISOMETRIC VIEW
SCALE 2:1

	TE P/N	CODING	TRAY	QTY	DESCRIPTION	MATERIAL	COLOR/FINISH	ITEM NO
A6	2-2320179-4	B-D	DIM:326*200*24.7mm	8	0.63 SQ PIN	CuZn30	Sn OVER Ni	2
				1	8 WAY HOUSING	PA10T OR SPS	BLUE	1
A6	2-2320179-3	A-C	DIM:326*200*24.7mm	8	0.63 SQ PIN	CuZn30	Sn OVER Ni	2
				1	8 WAY HOUSING	PA10T OR SPS	GREEN	1
	1-2320179-4	A-D	DIM:330*210*28.3mm	8	0.63 SQ PIN	CuZn30	Sn OVER Ni	2
				1	8 WAY HOUSING	PA10T OR SPS	BLACK	1
	1-2320179-3	A-C	DIM:340*210*25.5mm	8	0.63 SQ PIN	CuZn30	Sn OVER Ni	2
				1	8 WAY HOUSING	PA10T OR SPS	GREEN	1
	1-2320179-2	B-C	DIM:340*210*29mm	8	0.63 SQ PIN	CuZn30	Sn OVER Ni	2
				1	8 WAY HOUSING	PA10T OR SPS	BROWN	1
	1-2320179-1	A-D	DIM:340*210*29mm	8	0.63 SQ PIN	CuZn30	Sn OVER Ni	2
				1	8 WAY HOUSING	PA10T OR SPS	BLACK	1
	2320179-4	B-D	DIM:375*275*31mm	8	0.63 SQ PIN	CuZn30	Sn OVER Ni	2
				1	8 WAY HOUSING	PA10T OR SPS	BULE	1
	2320179-3	A-C	DIM:375*275*31mm	8	0.63 SQ PIN	CuZn30	Sn OVER Ni	2
				1	8 WAY HOUSING	PA10T OR SPS	GREEN	1
	2320179-2	B-C	DIM:375*275*31mm	8	0.63 SQ PIN	CuZn30	Sn OVER Ni	2
				1	8 WAY HOUSING	PA10T OR SPS	BROWN	1
	2320179-1	A-D	DIM:375*275*31mm	8	0.63 SQ PIN	CuZn30	Sn OVER Ni	2
				1	8 WAY HOUSING	PA10T OR SPS	BLACK	1

PART LIST

16 WAY CODINGS

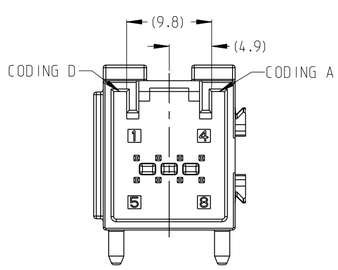

CODING A-D

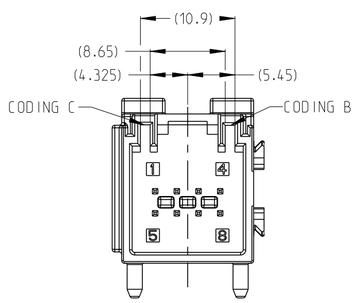

CODING B-C

1. PLASTIC MATERIAL: PA10T OR SPS
   SQ PIN MATERIAL: CuZn30
   PLATING SPEC: TIN OVER NICKEL
2. MATERIAL MARKING
3. PLASTIC HOUSING PRODUCTION MONTH CLOCK
4. TOOL CAVITY MARKING 1.2.3.4...
5. PRODUCT OPERATION TEMPERTURE RANGE:-40°C~105°C
6. SUITABLE MATING CONNECTOR: 2322346
7. TE-LOGO
8. TE SEMIFINISHED PART NUMBER
9. TE SEMIFINISHED PART REVISION
10. PRODUCT ASSEMBLY DATA INFORMATION

THIS DRAWING IS A CONTROLLED DOCUMENT.

DIMENSIONS: mm

TOLERANCES UNLESS OTHERWISE SPECIFIED:
0 PLC ±
1 PLC ±0.1
2 PLC ±0.01
3 PLC ±0.001
4 PLC ±0.0001
ANGLES ±

MATERIAL 1

FINISH -

DWN 12MAY2017 K.WEI
CHK 21JUL2017 E.JIANG
APVD 26JUL2017 L.YIN

PRODUCT SPEC 108-101528
APPLICATION SPEC 114-101065
WEIGHT -

TE Connectivity

NAME 8 WAY MQS PIN HEADER
-

SIZE A2 | CAGE CODE - | DRAWING NO C-2320179 | RESTRICTED TO -

CUSTOMER DRAWING | SCALE 2:1 | SHEET 1 OF 1 | REV A6

printed on 22 Nov 2024 16:08 (from TE587697