CAD FILE:

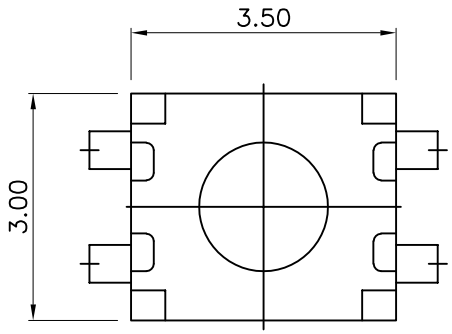

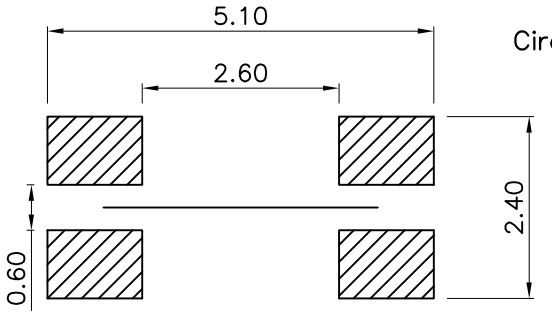

PCB Layout(Pattern Side)

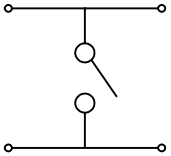

Circuit diagram

NO.1	
PART NO	H
XX	2.0
XX	2.5

NO.2	
PART NO	vigor
070	70±30
100	100±50
160	160±50
250	250±50
320	320±80
350	350±80
520	520±130

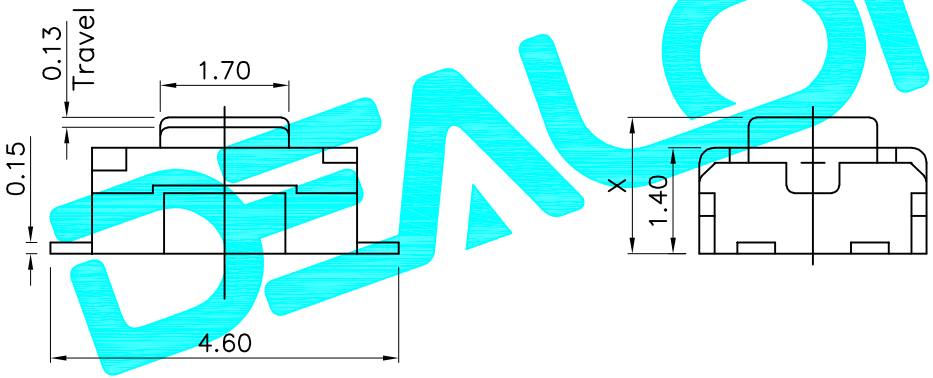

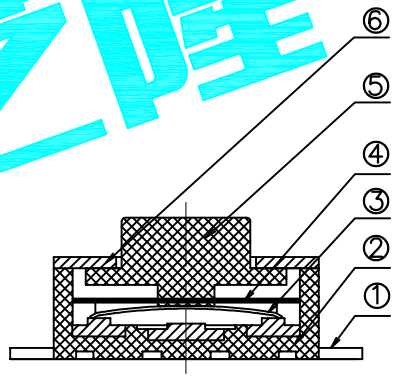

ITEM	PART NAME	QTY.	MATERIAL	FINISHING
⑥	Cover	1	SUS	Natural
⑤	Knob	1	LCP	Black
④	Dust Cover	1	Kapton Film	Yellow
③	Contact	2	SUS	Plating silver
②	Base	1	LCP	Black
①	Terminal	4	Phosphor Bronze	Plating silver

APPROVALS		DATE
DRAWN	G.M.Chen	2015/5/19
CHECKED		
APPROVALS		

DEALON 德艺隆® ELECTRONICS CO.,LTD

TITLE: TACT SWITCHES

PART NO. TD-1182SA-XXH-XXX

UNIT: mm | SCALE: 1:1 | SHEET 1 OF 1

DRAWING NO. ——— | PROJ:

TOLERANCES ARE		ANGLE
30~以上	±0.30	±2°
10~30	±0.20	
5~10	±0.15	
~ 5	±0.10	

ECN NO.	REV.	DATE.	DESCRIPTION.	CHANGE.	CHECK.	APPRO.
———	A	———	NEW	———	———	———

DEALON 德艺隆 ®