SAMZO | REAC/ROHS

REV	ECN NO	DESRIPTION	DESIGN	APPROVAL	DATE
A1	NEW	Replace frame			2013.02.12

技术要求:
Technical requirements:

1.打铜底0.5-1UM,镍底1-3UM,亮锡3-5UM。
Copper Underlayer: 0.5 – 1 μm, Nickel Underlayer: 1 – 3 μm, Matte Tin: 3 – 5 μm

2.不得有脚变形，毛刺等缺陷。
There shall be no defects such as pin deformation and burrs.

3.插脚尖部符合可焊性要求。
The tip of the insertion pin shall meet the solderability requirements.

4.螺纹需符合通止规要求。
The thread shall meet the requirements of the go and no-go gauge.

5.材质：紫铜T2.
Material: Red copper T2.

6.过载电流：180A
Overload current: 180A

7.牙孔规格 M8
The specification of the threaded hole M8

8.未标注尺寸公差值按GB/T1184-1996H级
Unmarked dimensional tolerance values are in accordance with Grade H of GB/T1184-1996

9.螺丝扭力：3.0Nm
Screw torque：3.0Nm

10.盐雾试验：48小时
Salt spray test：48H

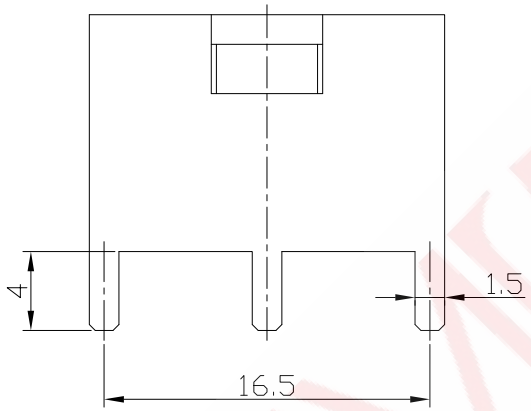

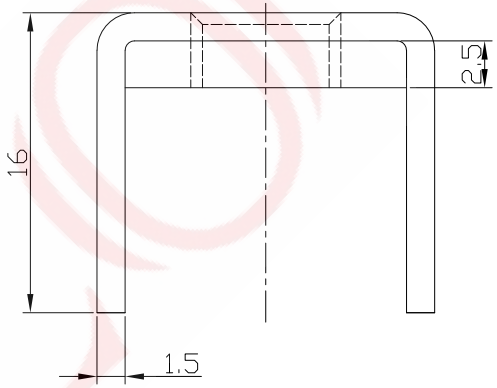

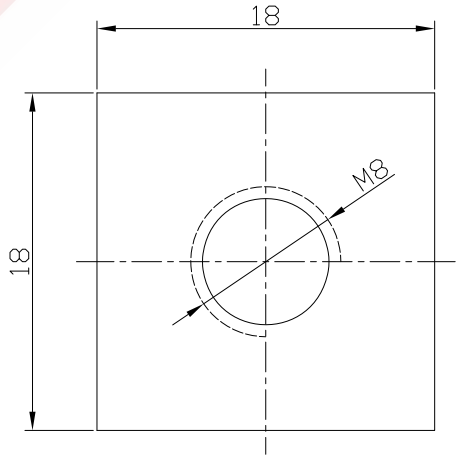

180 120 40 2 D8

- D8 — Pressing hole specification: M8
- 2 — Mold number: S005-T
- 40 — Pin height: 4.0mm
- 120 — Height above the board: 12.0mm
- 180 — Specification size:18*18mm

ITEM	DESCRIPTION	MATERIAL	QTY	FINSH/COLOR
A	Subject	Red copper T2	1	tin plating
B	Gasket	SPCC	1	tin plating
C	Washer	SPCC	1	

DESIGN	WANGGUIFA	2018.06.12
CHECKED	ZHENGUILAN	2018.06.12
APPROVED	LILIANJIANG	2018.06.14

GENERAL TOLERANCE	
⩾0~2<	±0.15
⩾2~5<	±0.25
⩾0~2<	±0.15
⩾5	±0.35

FIRST VIEW

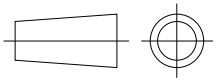

SCALE 1:1 UNIT mm

The copyright belongs to samzo parts [China] Co., Ltd. please use the material after samzo parts agree to authorize. The final right of interpretation belongs to samzo parts.
WWW.KKK-JP.COM

SAMZO COMPONENTS
Electronic switch and connector manufacturer

TITLE:: 18*18*16mm 6pin DIP T2
DWG NO: 180T-P005
PART NO: 180T-16008
MODEL NO: 180120402D8
NAME: PCB soldering terminal