SAMZO | REAC/ROHS

REV	ECN NO	DESRIPTION	DESIGN	APPROVAL	DATE
A1	NEW	Replace frame			2018.06.12

技术要求：

Technical requirements:

1. 打铜底0.5-1UM,镍底1-3UM,哑锡3-5UM。
   Copper base 0.5 - 1 UM, nickel base 1-3UM, matte tin 3 - 5 UM.
2. 不得有脚变形，毛刺等缺陷。
   There shall be no defects such as pin deformation and burrs.
3. 插脚尖部符合可焊性要求。
   The tip of the insertion pin shall meet the solderability requirements.
4. 螺纹需符合通止规要求。
   The thread shall meet the requirements of the go and no-go gauge.
5. 材质：紫铜T2.
   Material: Red copper T2.
6. 过载电流：150A
   Overload current: 150A
7. 螺孔为 M5
   The screw holes M5
8. 未标注尺寸公差值按GB/T1184-1996H级
   Unmarked dimensional tolerance values are in accordance with Grade H of GB/T1184-1996
9. 螺丝扭力：2.0Nm
   Screw torque: 2.0Nm

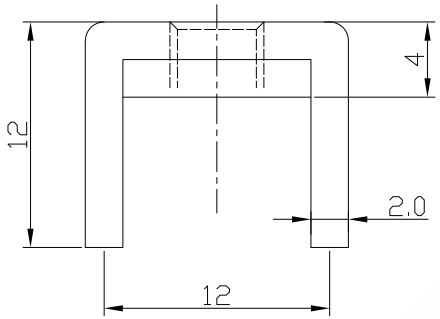

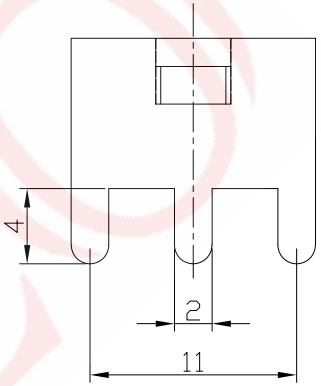

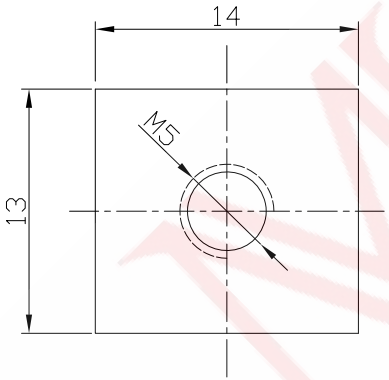

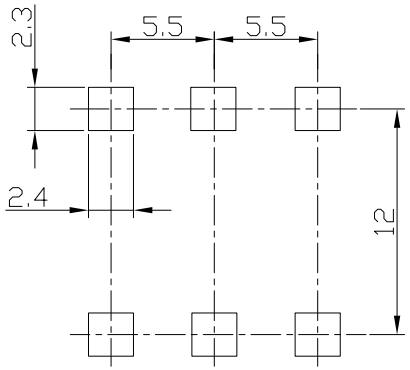

PCB LAYOUT

1314 80 40 2 D5

- D5 — Pressing hole specification: M5
- 2 — Mold number: S018-T
- 40 — Pin height: 4.0mm
- 80 — Height above the board: 8.0mm
- 1314 — Specification size:13*14mm

ITEM	DESCRIPTION	MATERIAL	QTY	FINSH/COLOR
A	Subject	Red copper (T2)	1	tin plating
B	Gasket	SPCC	1	tin plating

DESIGN	WANGGUIFA	2018.06.12
CHECKED	ZHENGUILAN	2018.06.12
APPROVED	LILIANJIANG	2018.06.14

GENERAL TOLERANCE	
⩾0~2<	±0.15
⩾2~5<	±0.25
⩾0~2<	±0.15
⩾5	±0.35

FIRST VIEW

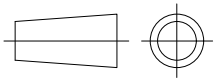

SCALE 1:1 UNIT mm

The copyright belongs to samzo parts [China] Co., Ltd. please use the material after samzo parts agree to authorize. The final right of interpretation belongs to samzo parts.
WWW.KKK-JP.COM

SAMZO COMPONENTS

Electronic switch and connector manufacturer

TITLE:: 13*14-H8+4mm（M5)

DWG NO: 1314120-P094

PART NO: 1314-2025002

MODEL NO: 131480402D5

NAME: PCB soldering terminal