REVISIONS					
REV.	ECN NO.	LOCATION	DESCRIPTION	DATE	DESIGN
A1	N/A			2024.12.9	
A2	ECN-P-2025120402	A2 X8		2025.12.04	

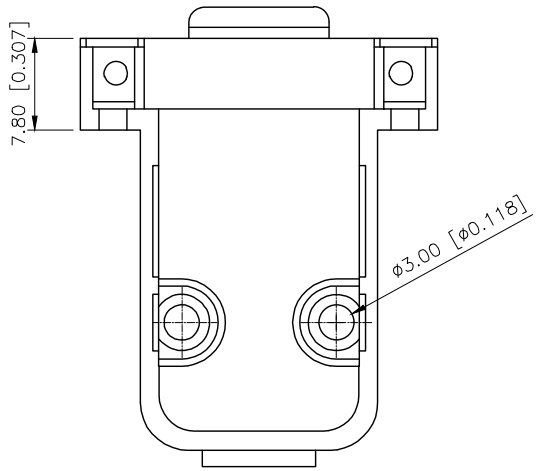

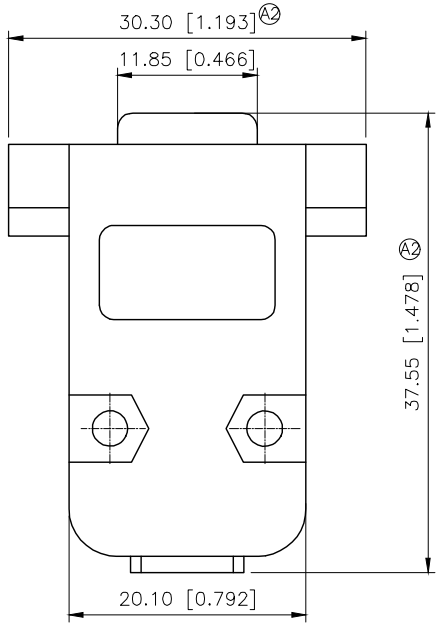

PART NO.:

X09 D F GY

Series No
D:D-USB Plastic shell
I:OD=8.0mm; F:OD=6.5mm
Color: B:BLACK W:White BL:Blue
Y:Yellow G:Green R:Red GY:Gray

NOTE:
the hardware is not marked with a tolerance of 0.2mm and the rubber parts are not marked with a tolerance of 0.50mm

:	0.2MM	0.50MM

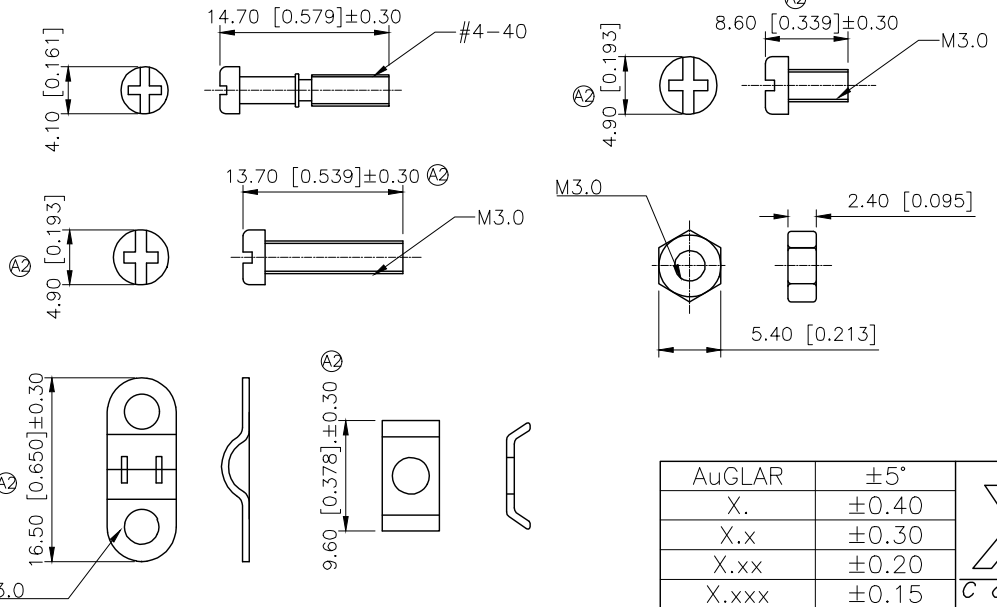

NO	NAME	PCS	MATERAL
1	Upper and lower shells	1	ABS
2	screws	2	Iron nickel plating
3	Set the screws	2	Iron nickel plating
4	Set the nut	2	Iron nickel plating
5	Clamp screws	2	Iron nickel plating
6	Clamping tabs	2	Iron nickel plating
7	gasket	2	Iron nickel plating

AuGLAR	±5°
X.	±0.40
X.x	±0.30
X.xx	±0.20
X.xxx	±0.15
UNSPECIFIED TOLERAuCES	

XKB Connection 星创

DESIGN		VIEW:	MODEL TYPE: D-SUB
CHECKED		UNIT: mm/in	PART NO.: X09DXX
APPROVED		SIZE: A4	DWG NO.:

XKB INDUSTRIAL PRECISION CO.,LIMITED

SCALE	PAGE	REVISION
N/A	1/1	X09DFGY