linear dimension(Tolerances Standard GB/T 14486-2008)								—	▱	⊥
variable range	to 6	over 6 to 10	over 10 to 30	over 30 to 60	over 60 to 100	over 100 to 160	over 160 to	to 10	over 10 to 100	over 100 to
tolerance	±0.20	±0.30	±0.50	±0.70	±1.00	±1.30	±1.60	0.10	0.30	0.60

版本 Version	描述 Description	设计 Design	批准 Approved	日期 Date
A	新发行	熊武敌	楼特高	2024.03.10

材质及电镀 MATERIAL	
螺丝 Screws	M2.0，钢，镀锌 M2.0,Steel,Zn plated
弹片 Spring	铜合金，镀镍 Copper alloy,Ni plated
方针 Pin header	铜合金，镀锡 Copper alloy,Tin plated
塑件 Housing	PA66,UL94V-0
电气性能 ELECTRICAL	
参考标准 Stanard	UL IEC
额定电压 Rated voltage	300V 250V
额定电流 Rated current	7A 10A
使用线径 Wire range	24-18AWG 1.0mm²
接触电阻 Contact resistance	20mΩ
绝缘电阻 Insulation resistance	500MΩ/DC500V
耐电压 Withstanding voltage	AC1600V/1Min
机械性能 MECHANICAL	
温度范围 Temp.range	-40℃~+105℃
瞬时温度 Max.soldering	+250℃ for 5 Sec
扭矩 Torque	2.04kgf.cm/0.2N.m
剥线长度 Strip length	4.5~5mm

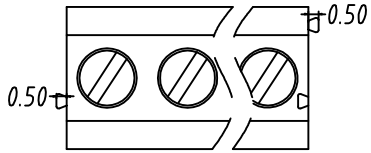

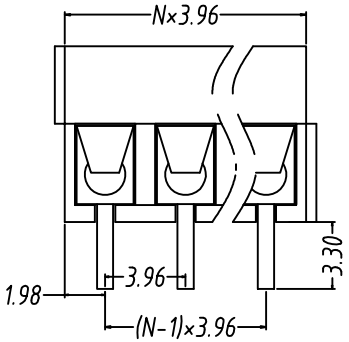

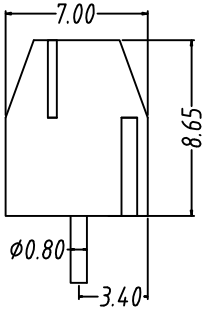

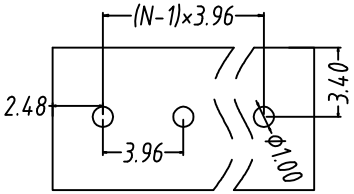

PCB LAYOUT

编码原则(Product Number Code):

WJ350V-3.96-XXP-1Y-00A

- WJ350V：产品型号(Series No.)
- 3.96：间距(Pitch)
- XXP：极数(No.of Poles)
- 1：塑体颜色(Housing Color)
- 00A：客户需求 (Customer Request)

1:单倍间距 (Single Pitch)
2:双倍间距 (Double Pitch)

1:灰色(Grey) 6:红色(Red)
2:蓝色(Blue) 7:透明 (Transparent)
3:黑色(Black)
4:绿色(Green) 8:黄色(Yellow)
5:橙色(Orange) 9:白色(White)

第三视角(THIRD ANGLE PROJECTION)				螺钉式PCB接线端子 PCB SCREW TERMINAL BLOCK	
图纸类型(TYPE)	CUSTOMER DRAWING			型号 (NAME)	WJ350V-3.96-XXP-1Y-00A
单位(UNITS)	mm	版本(VERSION)	A		
尺寸(SIZE)	A4	KANGNEX	NBWJ	宁波康奈克斯电气有限公司 Ningbo Kangnex Electric Co.,Ltd	
比例(SCALE)	1:1				
图页(SHEET)	1/1				