Pb Process Capable

RoHS Compliant

Level-1 Controlled Substances are banned

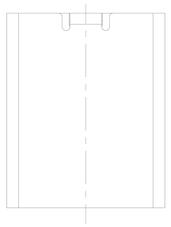

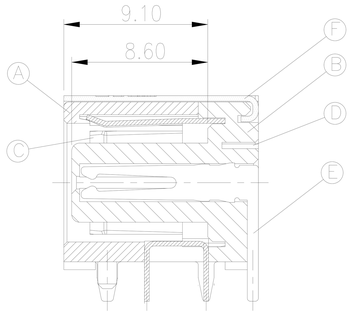

SECTION A-A
SCALE 1:1

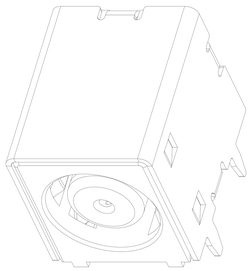

SPECIFICATIONS:

1. ELECTRICAL CHARACTERISTICS:
   1-1. RATING: 42V 10A
   1-2. CONTACT RESISTANCE: 30mΩ MAX.(INITIAL)
   1-3. DIELECTRIC WITHSTANDING VOLTAGE: 500V AC FOR ONE MINUTE.
   1-4. INSULATION RESISTANCE: 100MΩ MIN. MEASURED BY 250 VDC
2. MECHANICAL CHARACTERISTICS:
   2-1. INSERTION FORCE : 3.0 KGF Max.
   2-2. WITHDRAWAL FORCE : 0.35 KGF Min.
3. LIFE TEST: 5,000 CYCLES MIN.
4. TO CONFORM TO SINGATRON HAZARDOUS SUBSTANCE FREE SPEC.

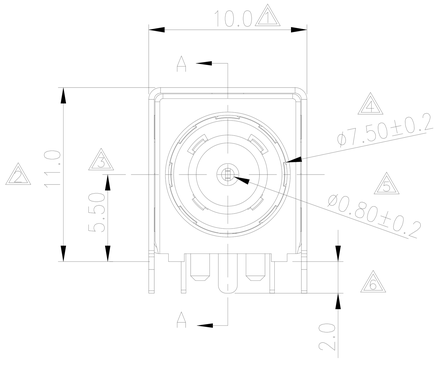

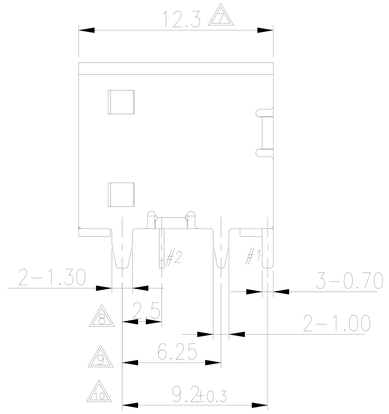

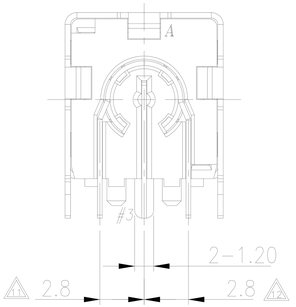

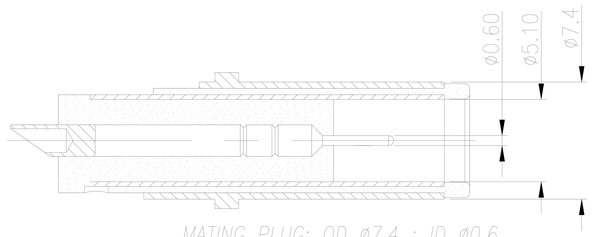

MATING PLUG: OD ø7.4 ; ID ø0.6
Tolerance:±0.05

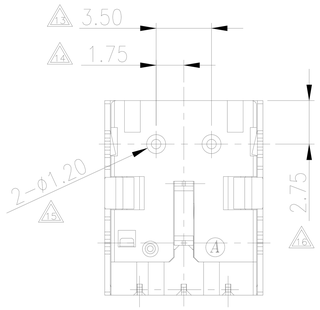

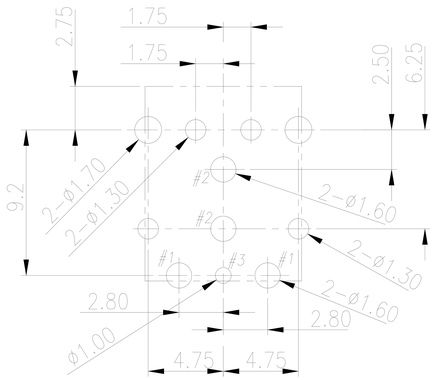

RECOMMENDED P.C.B LAYOUT
TOP VIEW (TOLERANCE:±0.05)

SCHEMATIC

NO.	DESCRIPTION	QTY	MATERIAL	COLOR	REMARK
F	SHELL	1	BRASS 0.35T	——	Ni 60u"Min
E	SIGNAL (S)	1	COPPER ALLOY 0.3T	——	GOLD FLASH OVER Ni 50u"
D	CONTACT (+)	1	COPPER ALLOY 0.3T	——	GOLD FLASH OVER Ni 50u"
C	SPRING (-)	1	COPPER ALLOY 0.3T	——	GOLD FLASH OVER Ni 50u"
B	COVER	1	HIGH TEMP. THERMOPLASTIC	YELLOW(123C)	UL 94V-0
A	HOUSING	1	HIGH TEMP. THERMOPLASTIC	YELLOW(123C)	UL 94V-0

ECN(DCN) NO.	REV	DATE	DESCRIPTION	CHANGE	APPRO.
			DJ-D053-080-10A-Z		
——	0	16'/06/03	NEW	JASON	Max.hu

DESIGN	Jason	16'/06/03
CHECK	Jason	16'/06/03
APPRO.	Max.hu	16'/06/03

GENERAL TOLERANCE
UNLESS OTHERWISE SPECIFIED

General	Angle
X ± 0.50	X °± 3°
X.X ± 0.30	X.X °± 2°
X.XX ± 0.20	X.XX °± 1°
X.XXX ± 0.10	

浙江创都电子科技有限公司

CUSTORMER COPY

TITLE: DC-JACK

PART NO. DJ-D053-080-10A-Z

PROJ: SCALE: 1:1 UNIT:mm SIZE: A4 SHEET: 1 OF 1

Original:Design: Jason Check: Jason Appro:Max.hu Date: 16'/06/03