产品规格书

SPECIFICATION

客户名称 Customer Name	
客户料号 Customer No.	
产品描述 Product Description	6028 Back View RGB LED
产品型号 Product Model	YY-6028RGBC-AA4PP23

永裕确认 Yong Yu Confirm			客户确认 Customer Confirm		
批准 Approved by	审核 Checked by	编制 Prepared by	批准 Approved	品质 Quality	工程 Engineering
Li Chunyan	Huang Haijun	Chen Tianwei			
结果判定：Judge outcome		OK	结果判定：Judge outcome		

公司地址：深圳市龙岗区坂田街道雪象社区上雪工业城东区 9 号 D 栋厂房 5 楼
Add： Floor 5, Plant Building D, No.9, East Shangxue Industrial City, Xuexiang Community, Bantian Street, Longgang District, Shenzhen
电话：**+86-755-89202226** 网址：**www.zgszyy.cn**
TEL：+86-755-89202226 **URL：www.zgszyy.cn**

Directory 目录

1. General Description 产品描述 3

2.Features 产品特征 3

3. Application 产品应用 3

4. Package Dimension 封装尺寸 4

5.Absolute maximum ratings at Ta=25℃/Ta=25℃时的绝对最大额定值 5

6.Electrical-optical characteristics at Ta=25℃/Ta=25℃时的电光特性 6

7.Photoelectric parameters are divided into BIN sprcifications/光电参数分 BIN 规格 7

8.Typical Optical Characteristics Curves 典型光学特性曲线 9

9.Packaging Specification/包装规范 10

10.Label description/标签描述 11

11.Reliability Test Items and Conditions/可靠性试验项目和条件 12

12.Cautions/注意事项 13

1、General Description 产品描述

Product Package: 5.88mmX2.8mmX1.8mm

产品尺寸: 5.88mmX2.8mmX1.8mm

2、Features 产品特征

►PLCC Package　PLCC 封装

►Extremely wide viewing angle　发光角度大

►Suitable for all SMT assembly and solder process　适用于所有的 SMT 组装和焊接工艺

►Available on tape and reel　适用于载带及卷轴

►Moisture sensitivity level: Level 3　防潮等级 Level 3

►Compliance with RoHS and REACH　符合 RoHS 和 REACH 要求

3、Application 产品应用

►Telecommunication: indicator and backlighting in telephone and fax电信：电话和传真中的指示灯和背光

►Backlight for LCD,switch and symbol，display　LCD背光，转换器、开关和标志，显示器等、

►Ambiance lamp 氛围灯

►General use 一般应用

4、Package Dimension 封装尺寸

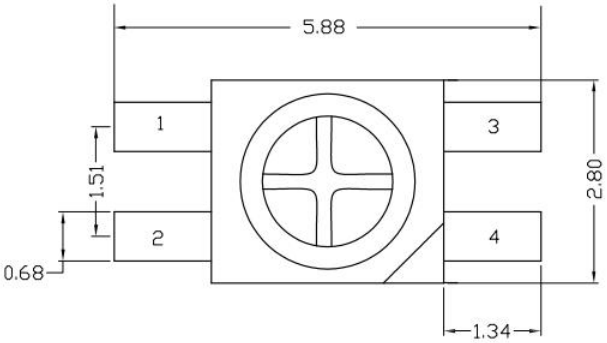

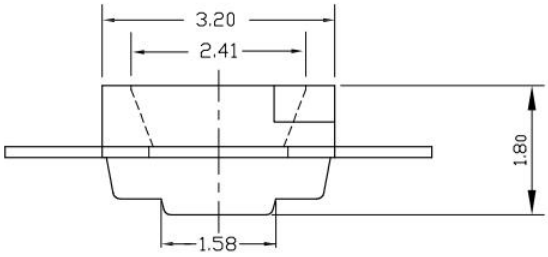

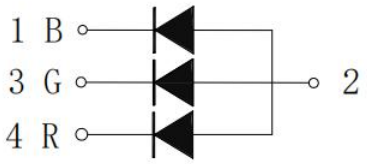

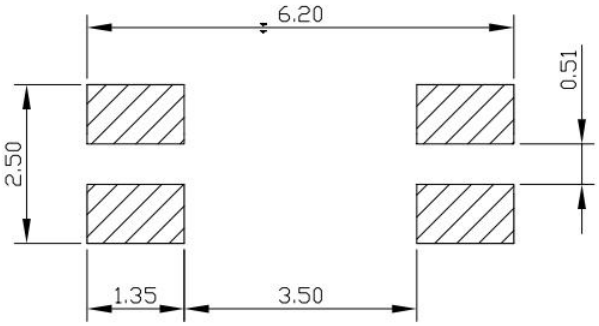

Recommended solding pad design

Notes:

1、All dimensions are in millimeters (inches).所有尺寸都以毫米(英寸)为单位。

2、Tolerance is ± 0.10mm (0.004”) unless otherwise specified.除非另有说明，公差为±0.10mm(0.004”)。

3、Specifications are subject to change without notice.规格如有变更，恕不另行通知。

5、Absolute maximum ratings at Ta=25℃/Ta=25℃时的绝对最大额定值

Parameter 参数	Symbol 符号	Color 发光颜色	Rating 最大额定值	Unit 单 位
Power Dissipation 消耗功率	P_D	R	75	mW
		G	100	
		B	100	
Forward Current 正向直流工作电流	I_F	R	30	mA
		G	30	
		B	30	
Peak Forward Current *1 最大脉冲电流	I_{FP}	R	60	mA
		G	100	
		B	100	
Reverse Voltage 反向电压	V_R	R/G/B	5	V
Operating Temperature Range 工作温度范围	Topr	-40~+85		℃
Storage Temperature Range 存储温度范围	T_{stg}	-40~+100		℃
Soldering Temperature 焊接条件	T_{sld}	Reflow Soldering:245℃ for 10 secs Hand soldering : 300℃ for 3 secs		

*IFP Conditions: Duty 1/10 @1KHz

6、Electrical-optical characteristics at Ta=25℃/Ta=25℃时的电光特性

Parameter 参数	Condition 测试条件	Symbol 符号	Color 发光颜	Min. 最小值	Typ. 代表值	Max. 最大值	Unit 单位
Forward Voltage 正向电压	I_F=20mA	V_F	R	1.8	2.1	2.6	V
			G	2.6	3.0	3.3	
			B	2.6	3.0	3.3	
Luminous Intensity 发光强度	I_F=20mA	IV	R	360	-	715	Mcd
			G	1425	-	2240	
			B	360	-	565	
Dominant Wavelength 主波长	I_F=20mA	WD	R	615	621	625	Nm
			G	515	522	530	
			B	462	465	474	
Reverse Current 反向电流	V_R=5V	I_R	-	-	-	10	uA
Viewing Angle 半光强视角	I_F=20mA	$2\theta_{1/2}$	-	-	120	-	deg

Note:

1、Tolerance of luminous Intensity is ±10%.亮度公差±10%。

2、Tolerance of forward voltage is ±0.1V.正向电压公差±0.1V。

3、Tolerance of dominant wavelength is ±1nm.主波长公差 ±1nm。

7、光电参数分 BIN 规格/Photoelectric parameters are divided into BIN sprcifications

Bin Range of Luminous Intensity 发光强度分 BIN 规格

Chip	Bin Code	Min.	Max.	Unit	Condition
R	V	360	450	mcd	I_F=20 mA
	W	450	565		
	X	565	715		
G	AB	1425	1800		
	BA	1800	2240		
B	V	360	450		
	W	450	565		

Note: Tolerance of Luminous intensity: ±10%

Bin Range of Dominant Wavelength 主波长分 BIN 规格

Chip	Bin Code	Min.	Max.	Unit	Condition
R	R1	615	620	nm	I_F=20 mA
	R2	620	625		
G	G2	515	520		
	G3	520	525		
	G4	525	530		
B	B6	462	465		
	B7	465	468		
	B8	468	471		
	B9	471	474		

Note: Tolerance of Dominant Wavelength: ±1.0nm.

Bin Range of Forward Voltage 电压分 BIN 规格

Chip	Bin Code	Min.	Max.	Unit	Condition
R	V18	1.8	2.6	V	I_F=20 mA
G	V26	2.6	3.3		
B	V26	2.6	3.3		

Note: Tolerance of Forward Voltage: ±0.1V

8、Typical optical characteristics curves/光电参数代表值特征曲线

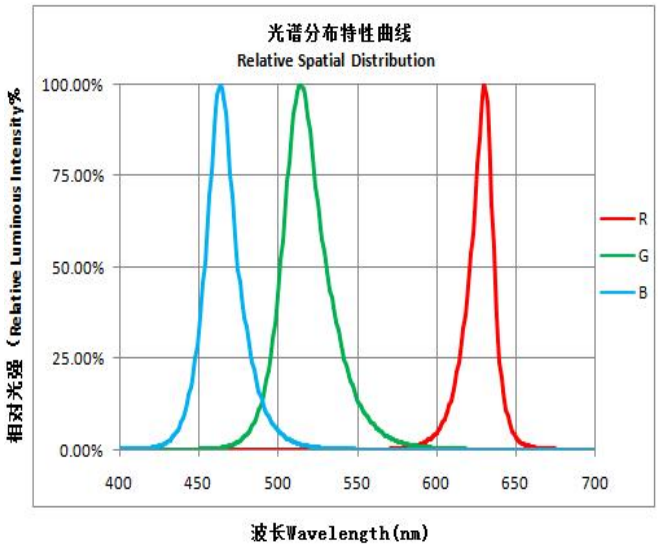

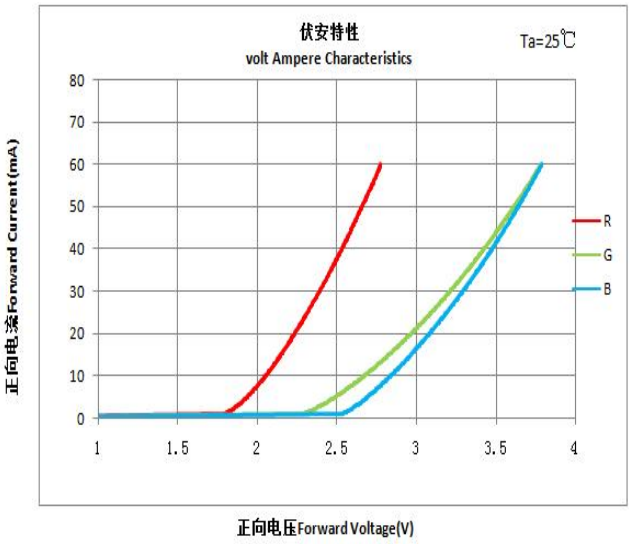

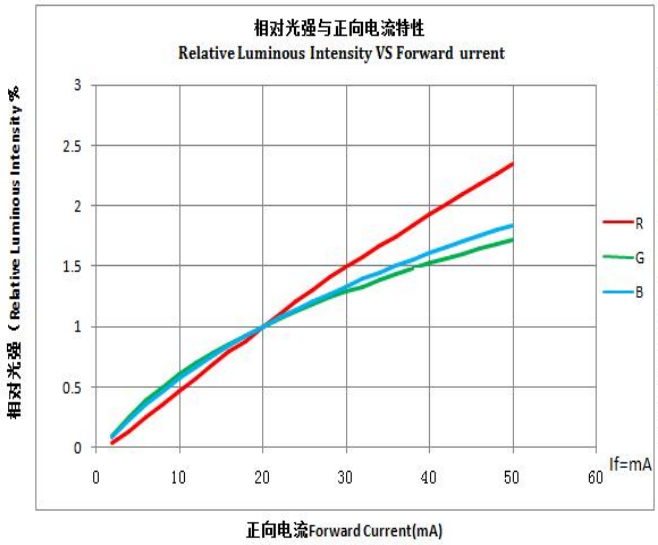

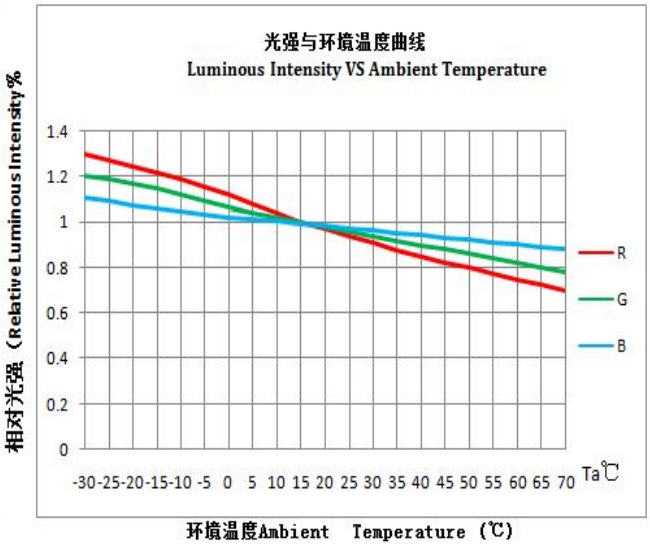

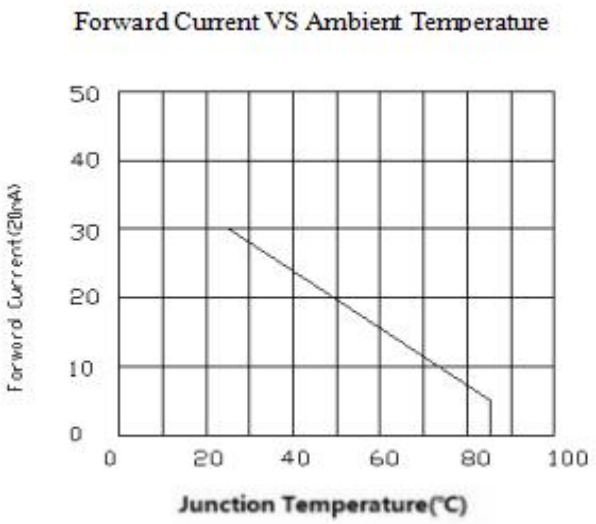

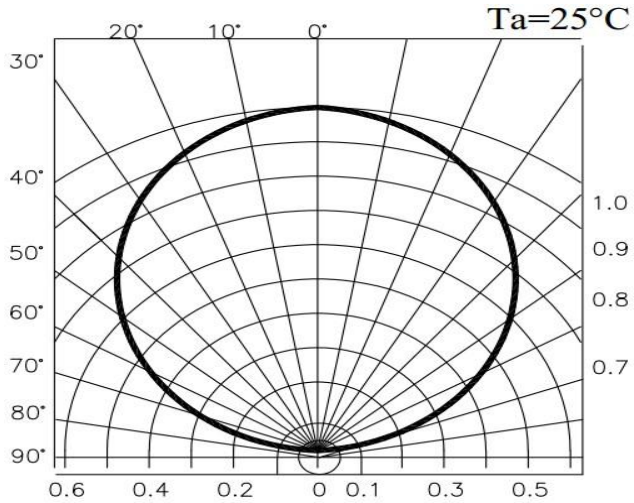

9、Packaging Specification/包装规范

●Dimensions for Reel (Unit: mm)
卷盘尺寸(单位:mm)

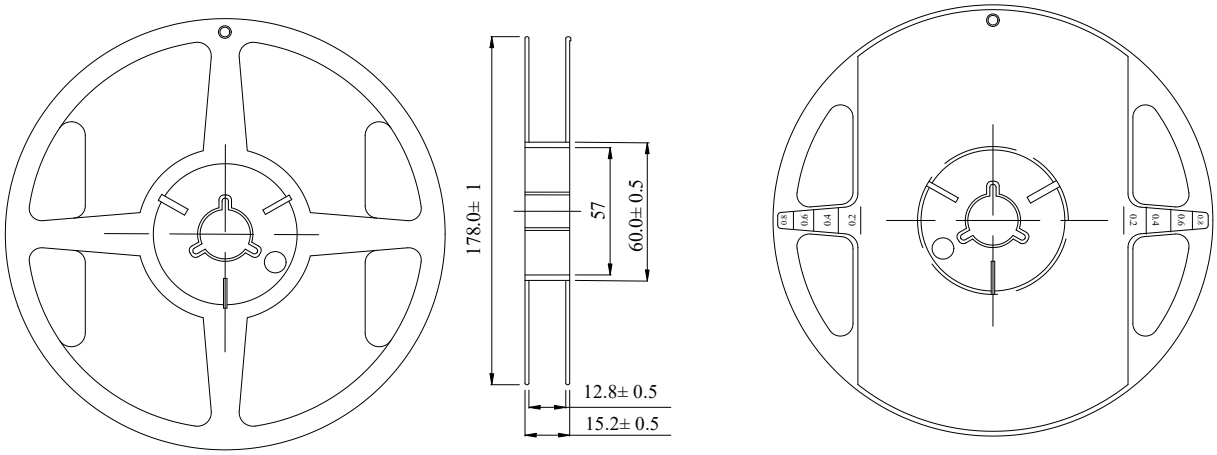

●Dimensions of Tape (Unit: mm)
胶带尺寸(单位:mm)

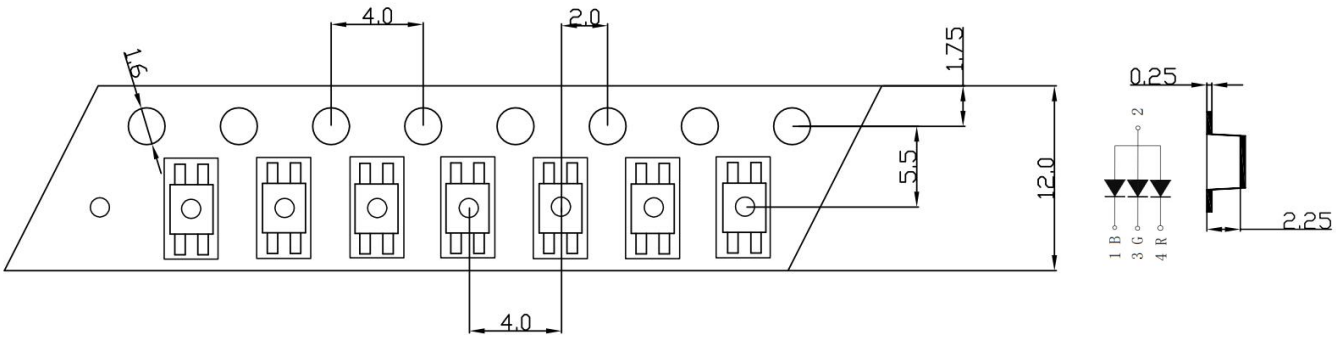

Notes:

1、All dimensions are in mm, tolerance is±0.1mm unless otherwise noted./所有尺寸均以毫米为单位，除非另有说明，公差为±0.1毫米。

2、Specifications are subject to change without notice./规格如有变更，恕不另行通知。

3、Loaded quantity: 2000 pcs/reel./装载数量:2000 件/卷。

●Moisture Resistant Packing Process/防潮包装工艺

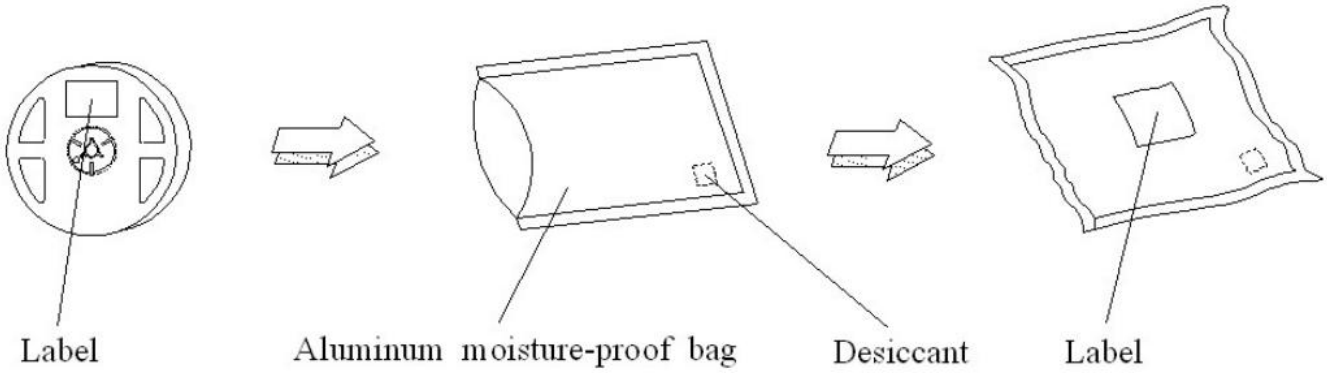

10、Label description/标签描述

11、Reliability Test Items and Conditions/可靠性试验项目和条件

Test Item 测试项目	Reference 参考标准	Test Conditions 测试条件	Test Hours / Times 时间	Number of amage 失效数	Ac/Re/ 接收/拒收
Reflow Soldering 回流焊	JESD22-B106	245℃(Max.), within 10seconds. (Max.)	2 times	0/20	0/1
Thermal Shock 冷热冲击	JESD22 A-104	-40℃ 15min t↓10s 100℃ 15min	100 cycles	0/20	0/1
Humidity Heat Storage 高温高湿储存	JESD22 A-108	Ta=85℃ RH=85%	1000 hours	0/20	0/1
High Temperature Storage 高温存储	JESD22 A-103D	Ta=100℃	1000 hours	0/20	0/1
Low Temperature Storage 低温储存	JESD22 A-103D	Ta=-40℃	1000 hours	0/20	0/1
Life Test 常温测试	JESD22 A-108	Ta=25℃ IF=20mA	1000 hours	0/20	0/1

Criteria For Judging Damage/损害判断标准:

Item 项目	Symbol 符号	Test conditions 测试条件	Criteria for Judgement 判断标准	
			Min. 最小值	Max. 最大值
Luminous intensity 亮度	IV	IF=I_{FT}	L.S.L*0.7	-
Forward Voltage 电压	VF	IF=I_{FT}	-	U.S.L*1.1
Reverse current 反向电流	IR	VR=5v	-	U.S.L*2

*U.S.L.: Upper Standard Level/U.S.L:高标准

*L.S.L.: Lower Standard Level/l.s.l.:低标准水平

* Note: Tsol-Temperature of tin liquid; IFT: Typical current./注:tsol -锡液温度;IFT:典型电流。

12、Cautions/注意事项：

12.1. 焊接/welding

12.1.1 SMD LED 灌封胶较软，外力易损坏发光面及塑料壳，焊接时要轻拿轻放。

SMD LED is soft and easy to damage the luminous surface and plastic shell by external force. It should be handled lightly when welding

12.1.2 建议使用易洗型的助焊剂，依照回流曲线条件回流焊接，回流次数最多两次，确保 LED 发光面干净，异物会影响发光颜色。

It is recommended to use soldering flux with tin wash type, reflow soldering according to the condition of reflux curve, reflow twice at most, ensure the LED luminous surface is clean, foreign matter will affect the luminous color。

12.1.3 只建议在修理和重工的情况下使用手工焊接；最高焊接温度不应超过 300 度，且须在 3 秒内完成（手工焊接只可焊接一次）烙铁最大功率应不超过 25W。

Manual welding is only recommended for repair and heavy industry;The maximum welding temperature should not exceed 300 degrees, and must be completed within 3 seconds (manual welding can only be welded once) soldering iron maximum power should not exceed 25W.

12.1.4 焊接过程中，严禁在高温情况下碰触胶体； 焊接后，禁止对胶体施加外力，禁止弯折 PCB，避免元件受到撞击。

During the soldering process, do not touch the lens at high temperature，After soldering, any mechanical force on the lens or any excessive vibration shall not be accepted to apply, also the circuit board shall not be bent as well.

12.1.5 请不要将不同 BIN 级的 LED 使用于同一个产品上，否则可能会导致产品的严重色差。

Please do not use different BIN LED on the same product, otherwise it may cause serious color difference.

12.1.6 建议焊接温度曲线 / Soldering Profile Suggested

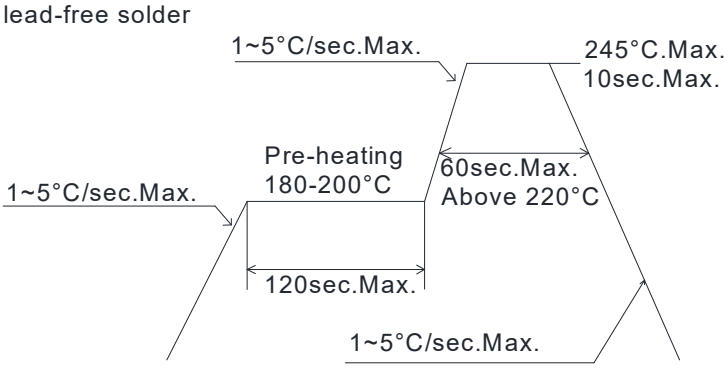

12.2. 清洗/cleaning

12.2.1 不能用超声波清洗,建议使用异丙醇（isopropyl alcohol）、纯酒精擦拭或浸渍(浸渍不超过 1 分钟)在室温下放置 15 分钟再使用；清洗后,确保 LED 发光面干净,异物会影响发光颜色。

/No ultrasonic cleaning. It is recommended to use isopropyl alcohol, pure alcohol to wipe or soak, not more than 1 minute, and leave at room temperature for 15 minutes before use. After cleaning, make sure the LED luminous surface is clean and the foreign matter will affect the luminous color。

12.2.2 应避免接触或污染天那水,三氯乙烯、丙酮、硫化物、氮化物、酸、碱、盐类，这些物质会损伤 LED.

Avoid touching or contaminating the water, trichloroethylene, acetone, sulfide, nitride, acid, alkali, and salts that can damage leds.

12.3. 灌封/enbedment

12.3.1 挥发性物质会渗透到 LED 内部，在通电产生光子及热的条件下，会导致 LED 变色，进而造成严重光衰，严禁使用任何对 LED 器件的性能或者可靠性有害的物质或材料，针对特定的用途和使用环境，建议对所有的物质和材料进行相容性的测试。在贴装 LED 时候，不要使用能产生有机挥发性气体的粘结剂。

Volatile substances to leach into the LED inside, photons in electricity and heat conditions, will lead to the LED color, thus causing serious droop, it is forbidden to use any of the LED

device performance or reliability of harmful substances or materials, for a specific purpose and use of the environment, advice on all the material and the material compatibility test.When attaching LED, do not use adhesive that can produce volatile organic gas.

12.3.2 使用正常灌封胶时,建议先以少量试验，常温点亮 168 小时，确定没有问题再作业。

It is recommended to light up for 168 hours at room temperature for a small amount of test before using normal filling and sealing glue。

12.4. 保存/save

12.4.1 打开包装前,LED 应存储在温度 30℃或以下,相对湿度在 RH60%以下,一年内使用。

Before opening the package, LED should be stored in a temperature 30 ℃ or below, under RH60 % relative humidity, used in a year。

12.4.2 LED 是湿度敏感元件,为避免元件吸湿,打开包装后,LED 应在温度 30℃或以下,相对湿度在 60%以内,使用时间 1 天。LED 吸潮后,回流焊时可能裂胶,影响发光颜色.对于未使用的散件,请去潮处理（卷装品：烘烤 60℃±5℃/24H；散装品：烘烤 105℃±5℃/1H）,然后再用铝箔袋密封后保存或者储存在氮气防潮柜内。

LED is humidity sensitive element, element to avoid moisture absorption, after open the packing, the LED should be in temperature 30 ℃ or below, within 60% relative humidity, using time 1 days. After moisture absorption, LED may crack when reflow soldering, influence the luminous color. For bulk is not used, please deal with the tide (for package product: bake 60 ℃ + / - 5 ℃ / 24 h.For bulk goods: baking 105 ℃ + 5 ℃, 1 hours), and then save after sealed with aluminum foil bag or stored in nitrogen moistureproof enclosure

12.4.3 保存环境中避免有酸、碱以及腐蚀气体存在，同时避免强烈震动及强磁场作用。

Avoid the presence of acid, alkali and corrosive gas in the preservation environment, and avoid strong vibration and strong magnetic field。

12.5.静电/electrostatic

12.5.1 静电或峰值浪涌电压会损坏 LED,避免在开灯、关灯时产生瞬时电压。

Static electricity or peak surge voltage will damage the LED, avoiding instantaneous voltage when the lamp is turned on or off。

12.5.2 建议使用 LED 时佩戴防静电手腕带,防静电手套,穿防静电鞋,使用的设备、仪器正确接地。LED 损坏后,表现出漏电流明显增加,低电流正向电压变低，低电流点不亮等现象。

It is recommended to wear anti-static wrist bands, anti-static gloves and anti-static shoes when using LED. The equipment and instruments used are properly grounded. After the LED was damaged, the leakage current increased obviously, the forward voltage of low current became lower, and the low current point did not light, etc。

12.6 测试/test

12.6.1 LED 要在额定电流下驱动,同时电路中需要加限流电阻保护；否则,轻微的电压变化就会引起较大的电流变化,从而破坏 LED。

LED shall be driven at rated current, and shall be protected by current-limiting resistance in the circuit. Otherwise, slight voltage changes will cause large current changes, which will damage the LED.

12.6.2 在电路导通或关闭情况下,要避免瞬间浪涌电压的产生,否则 LED 将被烧坏。

When the circuit is on or off, avoid sudden surge voltage. Otherwise, the LED will be burnt out

请参照下图示检测 LED:/Please check the LED as shown

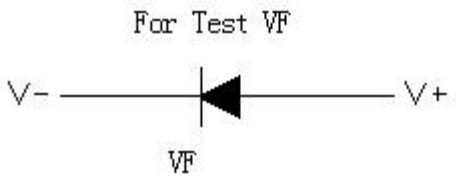

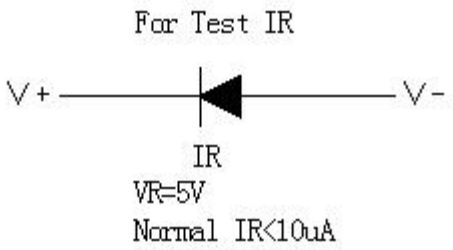

12.6.3 顺向电压 VF 过高或反向电压 VR 过高，均会损坏 LED.

If the forward voltage VF is too high or the reverse voltage VR is too high, the LED will be damaged.

12.6.4 点亮或测试 LED 时，加在 LED 两端的反向电压不得高于 5V，否则容易击伤 LED.

When lighting or testing the LED, the reverse voltage added on both ends of the LED shall not be higher than 5V, otherwise it is easy to damage the LED.

12.6.5 LED 发光颜色会随着工作电流不同而有少许变化,建议设计时考虑电阻与 LED 串联使用。

LED luminous color will vary slightly with the working current. It is suggested that resistance and LED should be used in series in the design

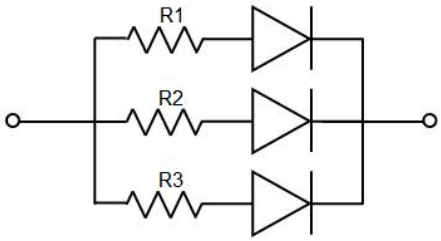

12.6.6 LED 容易因为自身的发热和环境的温度改变而改变，温度升高会降低 LED 发光效率，影响发光颜色在设计时应充分考虑散热问题。

LED is easy to change due to its own heat and changes in the temperature of the environment. The increase in temperature will reduce the luminous efficiency of LED, which will affect the luminous color. Heat dissipation should be fully considered in the design

12.7 声明/The statement

选购永裕光电生产之产品即享有保质期内标准售后服务，详情请洽询我司相关销售人员，永裕光电有限公司保留最终决定处理方式的权利，相关保质服务仅限于永裕光电产品本体，恕不对客户端产品/系统等负担衍展性的责任(含直接及间接)。客户如未对产品进行规格和功能性验证及索取对应产品承认书（规格书）资料进行签署确认直接下单则视为默认此服务条款。

客户进货检验 IQC(Incoming Quality Control)、最终检验 FQC(Final Quality Control)、系统质量检验 SQC(System Quality Control)等不同阶段如有发现产品品质异常，请尽速与我司相关销售人员联系。经永裕光电技术人员分析结果,如可确认归责为我司产品瑕疵的，客户可与我司相关销售人员协商退货/换货/退款方式择一处理。合作中惟本条款与其它合约协议不一致的均以此条款为准。

Yongyu photoelectric production of choose and buy products that have standard warranty period after-sales service, for details, please inquire our relevant sales staff, yong yu photoelectric co., LTD. Reserves the right to final decision approach is limited to ontology yongyu photoelectric products, quality services related to tell wrong client product/system such as the responsibility of the burden of yan malleable (including direct and indirect). If the customer places an order directly without verifying the specifications and functionality of the product and signing the corresponding product acknowledgement document (specification), it will be deemed as a default of this service term.

Incoming Quality Control (IQC), Final Quality Control (FQC), System Quality Control (SQC) and other different stages of customer Incoming Quality Control (IQC), Incoming Quality Control (FQC), System Quality Control (SQC) Please contact our sales staff as soon as possible. According to the analysis result of yongyu photoelectric technical personnel, if it can be confirmed that the fault is attributed to our company's product defects, the customer can negotiate with our company's relevant sales staff to choose a way to deal with the return/replacement/refund. In cooperation, this clause shall prevail if there is any inconsistency between this clause and other contractual agreements.

the luminous color. Heat dissipation should be fully considered in the design