NO.	ECN NO.	DESCRIPTION	DATE

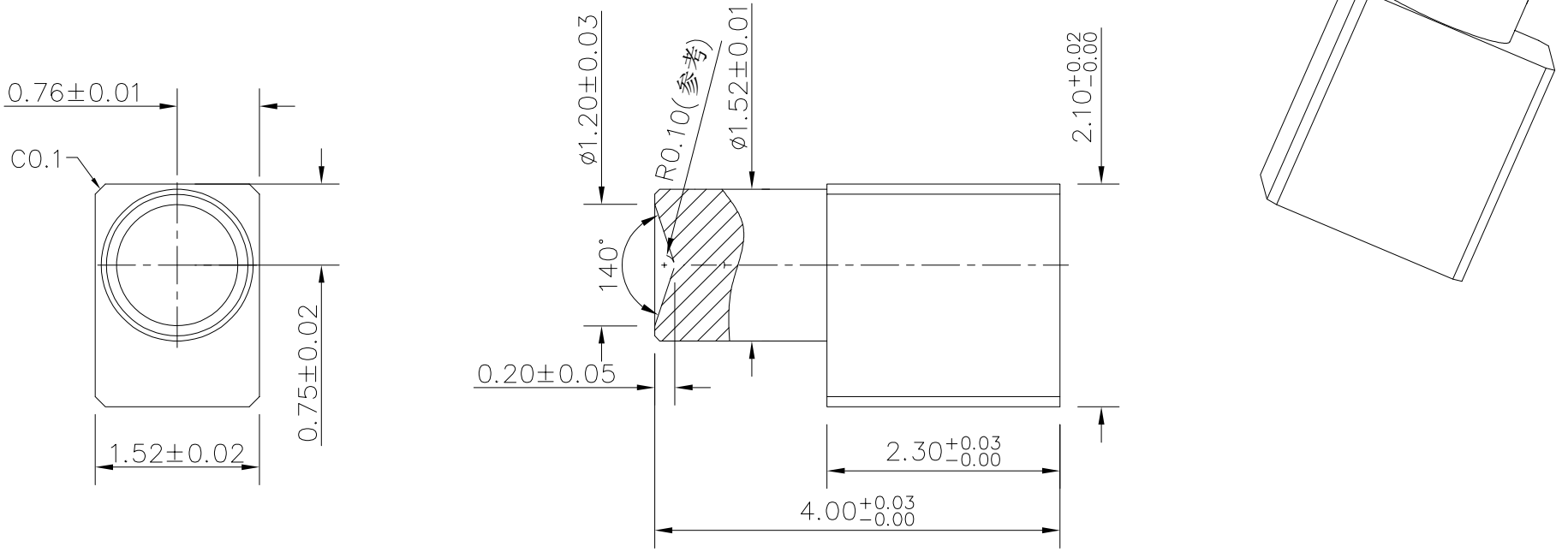

技术要求：

1.材料: 黄铜 C3604

2.不允许有批锋，毛刺；切断点最大不超过0.03mm。

3.镀金3u'，镍底50~80u',孔底须发亮。

深圳市鑫扬泽电子有限公司

TEL:0755-28773277 FAX:0755-28891353

SCALE:	N/A	UNIT	mm
SHEET:	1 of 1	PROJECTION	
DATE:	2022.12.1	VER.	D.0

THE UNMARKED TOLERANCE ARE AS BELOW :

LENGTH		ANGLE	
X.XX	±0.05mm	X.XX	±0.50°
X.X	±0.10mm	X.X	±1.00°
X.	±0.20mm	X.	±2.00°

DESIGNED BY:		DWG. NO.	YZ126615040TF-G3
CHECKED BY:		TITLE:	端 子
APPROVED BY:			