Shenzhen Yongyu Optoelectronics Co., LTD

Specification for approval

Customer Name : _____

Customer P/N : _____

Factory P/N : YY-2214GC-ATR11Q-AM

Rev. : A0

Date : 2024/04/03

Client approval			Approval examine and verify		
Approved	Checked	Audit affirm	Approved	Checked	Prepared fabrication
□ Qualified □ Disqualified Accept or not			DATE : 2024-04-03		

Contents

1. Description....2
1.1 General Description....2
1.2 Features....2
1.3 Application....2
1.4 Package Dimension....3
1.5 Product Parameters....5
1.6 Photoelectric parameters are divided into BIN sprcifications....6
1.7 Typical Optical Characteristics Curves....7
2. Packaging....8
2.1 Packaging Specification....8
2.1.1 Reel Dimension....8
2.1.2 Carrier Tape Dimension....8
2.1.3 Label Form Specification....9
2.2 Cardboard Box....9
2.3 Reliability Test Items And Condition....10
2.4 Criteria For Judging Damage....10
3. SMT Reflow Soldering Instructions....11
3.1 SMT Reflow Soldering Instructions....11
3.1 .1 Soldering Iron....12
3.1 .2 Repairing....12
3.1 .3 Cautions....12
4. Handing Precautions....13
4.1 Handing Precautions....13
5. Specification Review History....15

1. Description

1.1 General Description

The Blue LED, which was fabricated by using a blue chip.

Product Package : 2.2mmX1.4mmX1.3mm

1.2 Features

- PLCC Package
- Extremely wide viewing angle
- Suitable for all SMT assembly and solder process
- Available on tape and reel
- Moisture sensitivity level: Level 2a
- Compliance with RoHS and REACH
- Qualifications: The product qualification test plan is based on the guidelines of AEC-Q102 Stress Test Qualification for Automotive Grade Discrete Semiconductors
- Forword current : 2mA ≤ IF ≤ 30mA

1.3 Application

- Automotive backlighting or indication: gauges, switches, audio and video equipment... Etc
- Backlighting: liquid crystal display, switches, symbols, mobile phones and lighting ads

1.4 Package Dimension

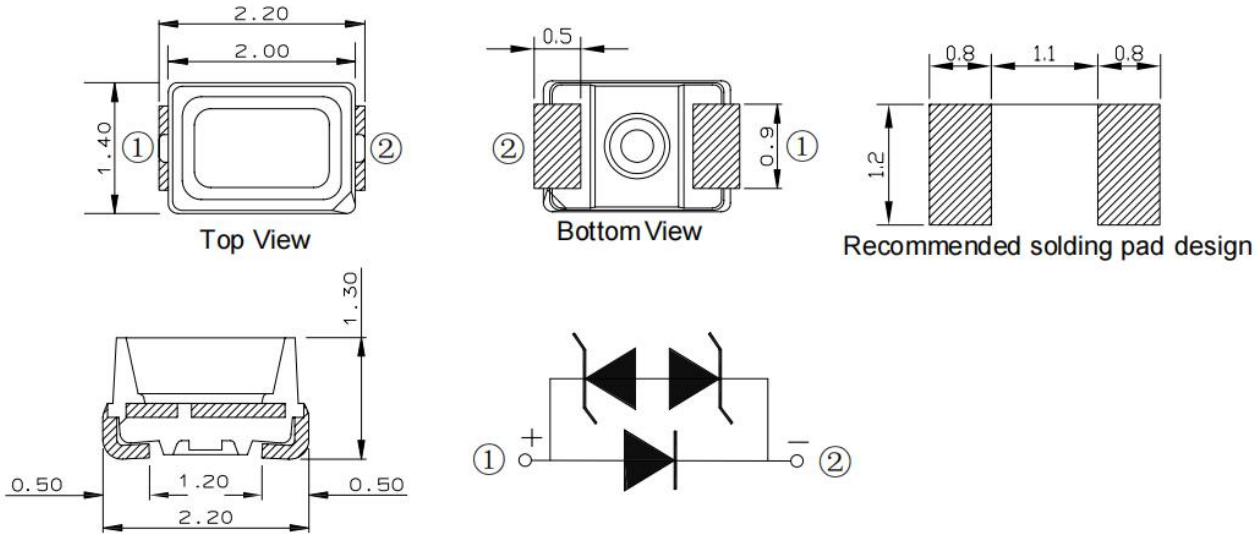

Notes:

1. All dimensions are in millimeters (inches).
2. Tolerance is ± 0.10mm (0.004”) unless otherwise specified.

1.5 Product Parameters

Absolute Maximum Ratings at Ta = 25℃ absolute maximum rating

Parameter	Symbol	Rating	Unit
Power Dissipation	P_D	87	mW
Forward Current	I_F	30	mA
Peak Forward Current *1	I_{FP}	90	mA
Thermal Resistance	R_{THJ-S}	300	C/W
Reverse Voltage	V_R	5	V
Electrostatic DischargeHBM	ESD	8000	V
Operating Temperature Rang	T_{OPR}	-40~+105	℃
Storage Temperature Range	T_{STG}	-40~+125	℃
Junction Temperature	T_J	≤ 120 ˚C	℃
Soldering Temperature	T_{SLD}	Reflow Soldering:245℃ for 10 secs Hand soldering : 300℃ for 3 secs	

*IFP Conditions: Duty 1/10 @1KHz

Typical Optical / Electrical Charactristics at Ta=25℃ Photoelectric property

Parameter	Condition	Symbol	Min.	Typ.	Max.	Unit
Forward Voltage	I_F=20mA	V_F	2.7	-	3.3	V
Luminous intensity	I_F=20mA	I_V	1120	1600	1800	mcd
Reverse Current	V_R=5V	I_R	-	-	10	uA
Doiminant Wavelength	I_F=20mA	W_D	515	521	530	nm
Viewing Angle	I_F=20mA	$2\theta_{1/2}$	-	120	-	deg

Notes:

1. Tolerance of luminous intensity is ±10%.
2. Tolerance of forward voltage is ±0.1V.
3. Tolerance of Doiminant Wavelength is ± 1nm.

1.6 Photoelectric parameters are divided into BIN sprcifications

Bin Range of Forward Voltgae

Bin	Min	Max	Unit	Condition
V27	2.7	2.8	V	IF = 20mA
V28	2.8	2.9		
V29	2.9	3.0		
V30	3.0	3.1		
V31	3.1	3.2		
V32	3.2	3.3		

Notes: Tolerance of Forward Voltage: ± 0.05V

Bin Range of Luminous intensity

Bin	Min	Max	Unit	Condition
AA	1120	1425	mcd	IF = 20mA
AB	1425	1800		

Notes: Tolerance of Luminous Intensity: ± 10%

Bin Range of Doiminant Wavelength

Bin	Min	Max	Unit	Condition
G2	515	520	nm	IF = 20mA
G3	520	525		
G4	525	530		

Notes:Tolerance of Doiminant Wavelength is ± 1nm.

1.7 Typical optical characteristics curves

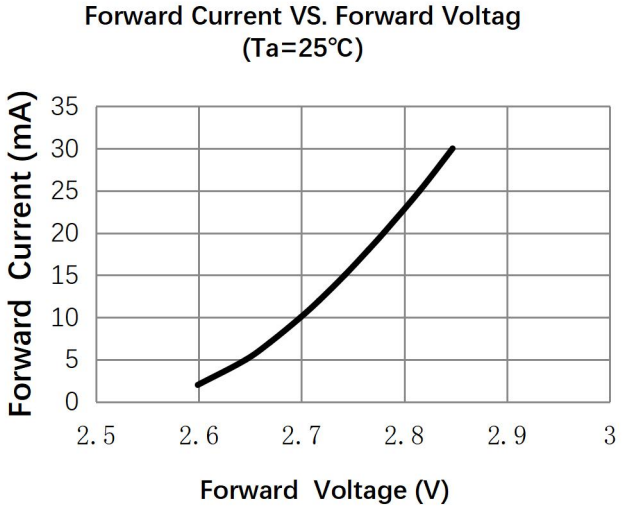

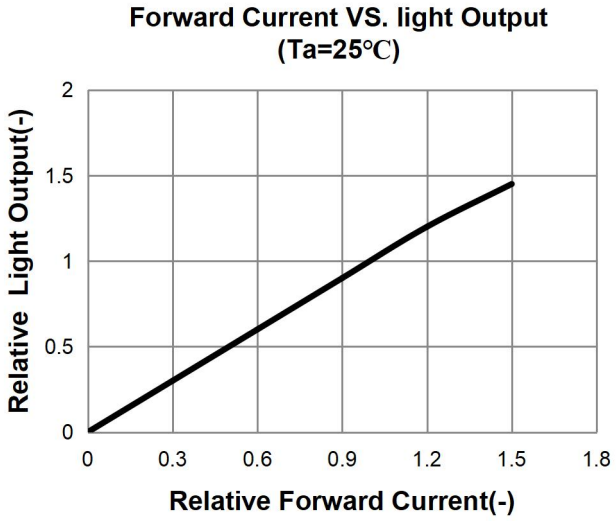

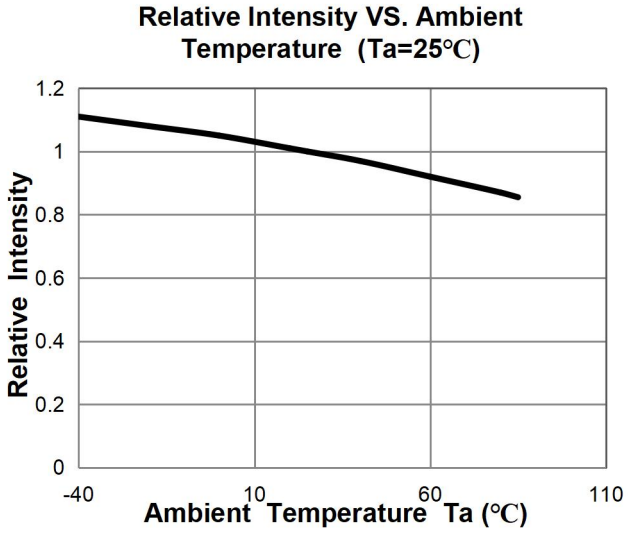

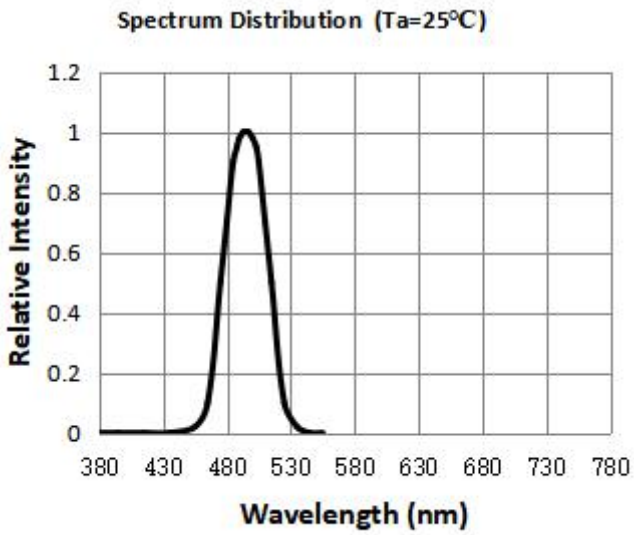

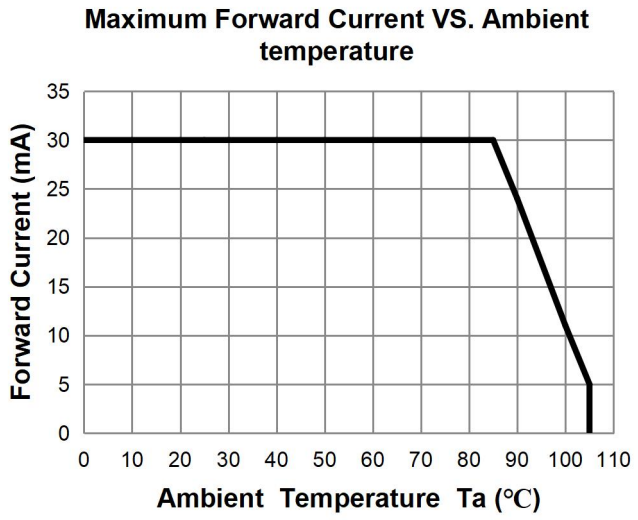

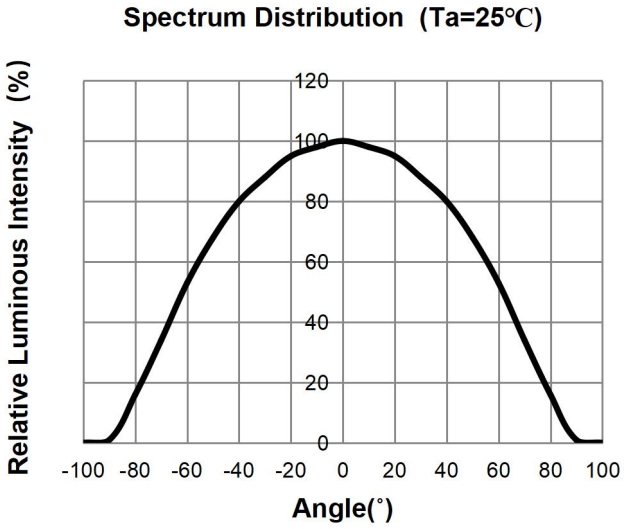

2. Packaging

2.1 Packaging Specification

2.1.1 Dimensions for Reel (Unit: mm)

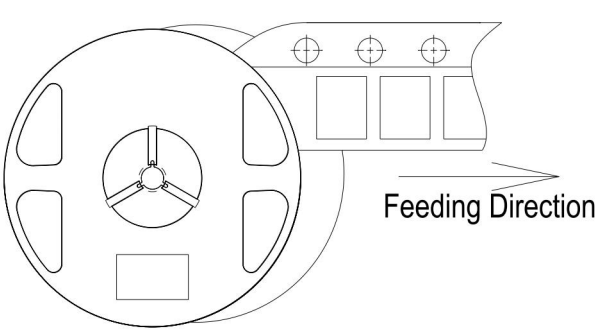

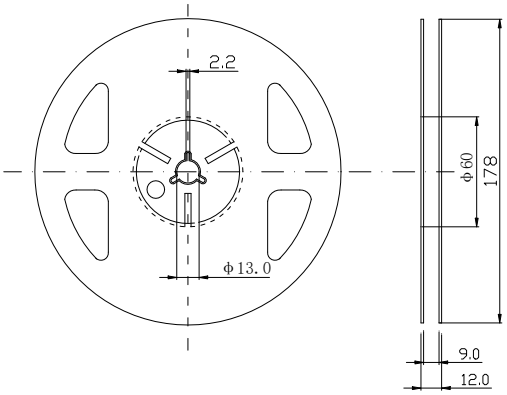

2.1.2 Dimensions of Tape (Unit: mm)

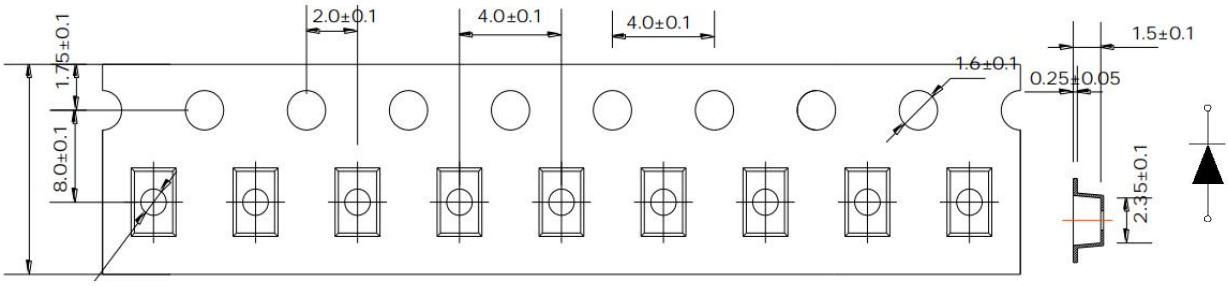

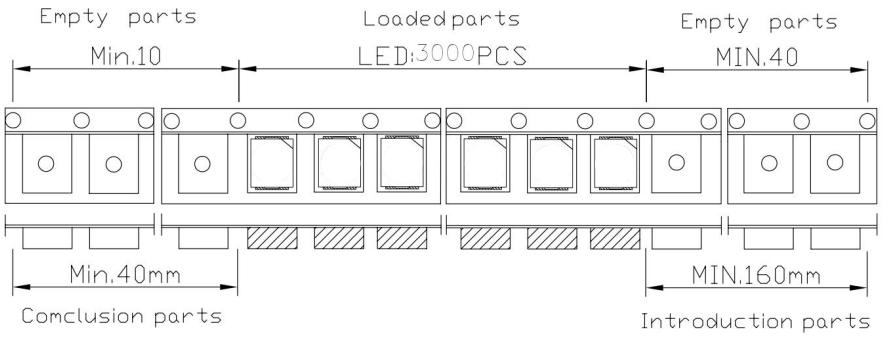

Notes:

1. All dimensions are in mm, tolerance is±0.1mm unless otherwise noted.
2. Loaded quantity: 3000 pcs/reel.

2.1.3 Label Form Specification

Label Size : 90mm X 40mm

2.2 Cardboard Box

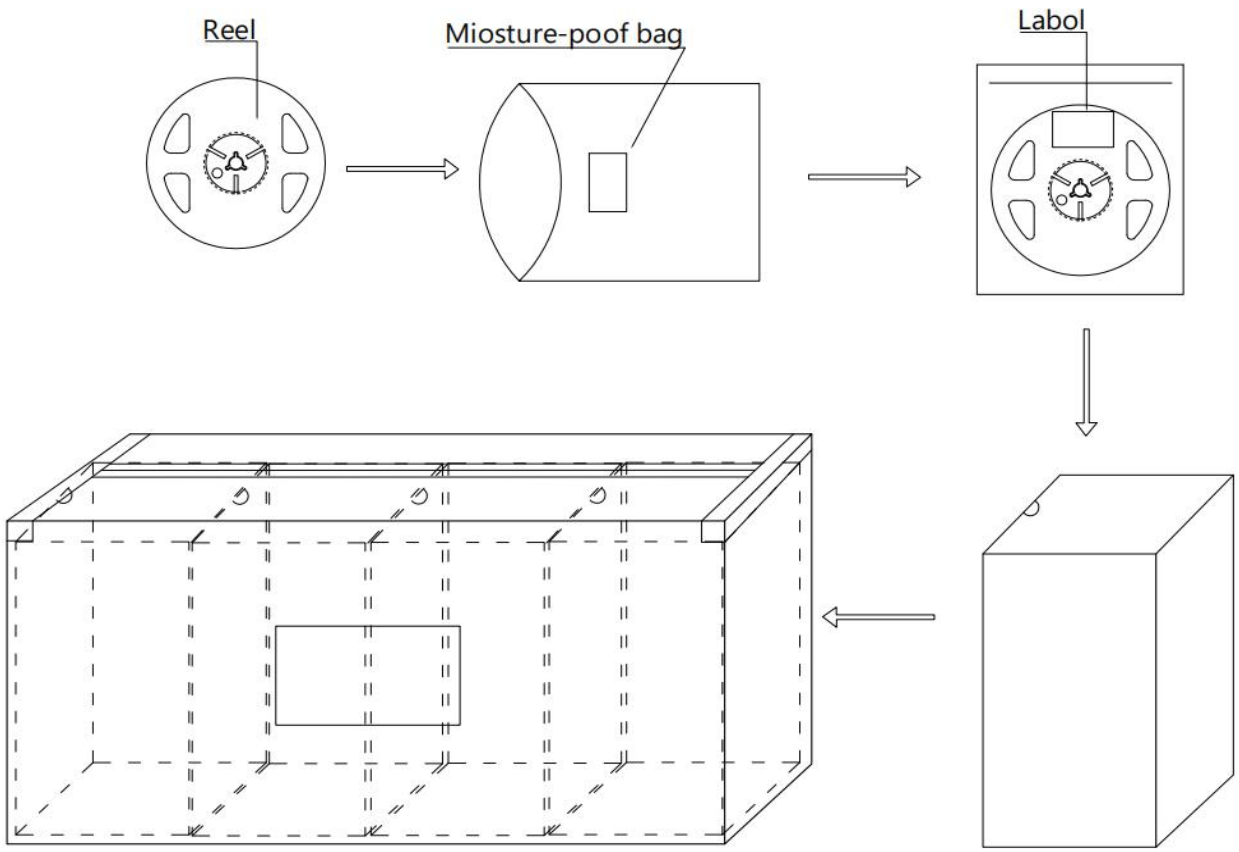

Inner Box : 230mm*130mm*250mm

Outer Box : 545mm*245mm*270mm

Al BAG : Inner Box 10 Reel

Outer Box : Inner Box*4EA * 10Reel = 40Reel

Reliability Test Items And Conditions

The reliability of products shall be satisfied with items listed below (&AEC-Q102)

* The technical information shown in the data worksheet is limited to products referenced by typical features and circuit instances. It constitutes neither a warranty of an industrial character nor an authorization of any license

Test Item	Reference	Test Conditions	Test Hours / Times	Number of amage	Ac/Re/
Reflow Soldering	JESD22-B106	245℃(Max.), within 10seconds.(Max.)	2 times	0/20	0/1
Thermal Shock	JESD22 A-104	-40℃ 15min t↓10s 105℃ 15min	1000 cycles	0/20	0/1
Humidity Heat Storage	JESD22 A-108	Ta=85℃ RH=85%	1000 hours	0/20	0/1
High Temperature High Humidity Life Test	JESD22 A-108	85℃/ 85%RH IF=5mA	1000 hours	0/20	0/1
Electrostatic Discharge(ESD)Test	AEC Q102	According to the SPRC	1000 hours	0/20	0/1
High Temperature Storage	JESD22 A-103D	Ta=125℃	1000 hours	0/20	0/1
Low Temperature Storage	JESD22 A-103D	Ta=-40℃	1000 hours	0/20	0/1
Life Test	JESD22 A-108	Ta=25℃ IF=20mA	1000 hours	0/20	0/1

2.3 Criteria For Judging Damage

Item	Symbol	Test conditions	Criteria for Judgement	
			Min.	Max.
Luminous intensity	IV	IF=I_{FT}	L.S.L*0.7	-
Forward Voltage	VF	IF=I_{FT}	-	U.S.L*1.1
Reverse current	IR	VR=5v	-	U.S.L*2

* U.S.L.: Upper Standard Level

* L.S.L.: Lower Standard Level

* Note: Tsol-Temperature of tin liquid; IFT: Typical current

3. SMT Reflow Soldering Instructions

3.1 Sriteria For Judging Damage

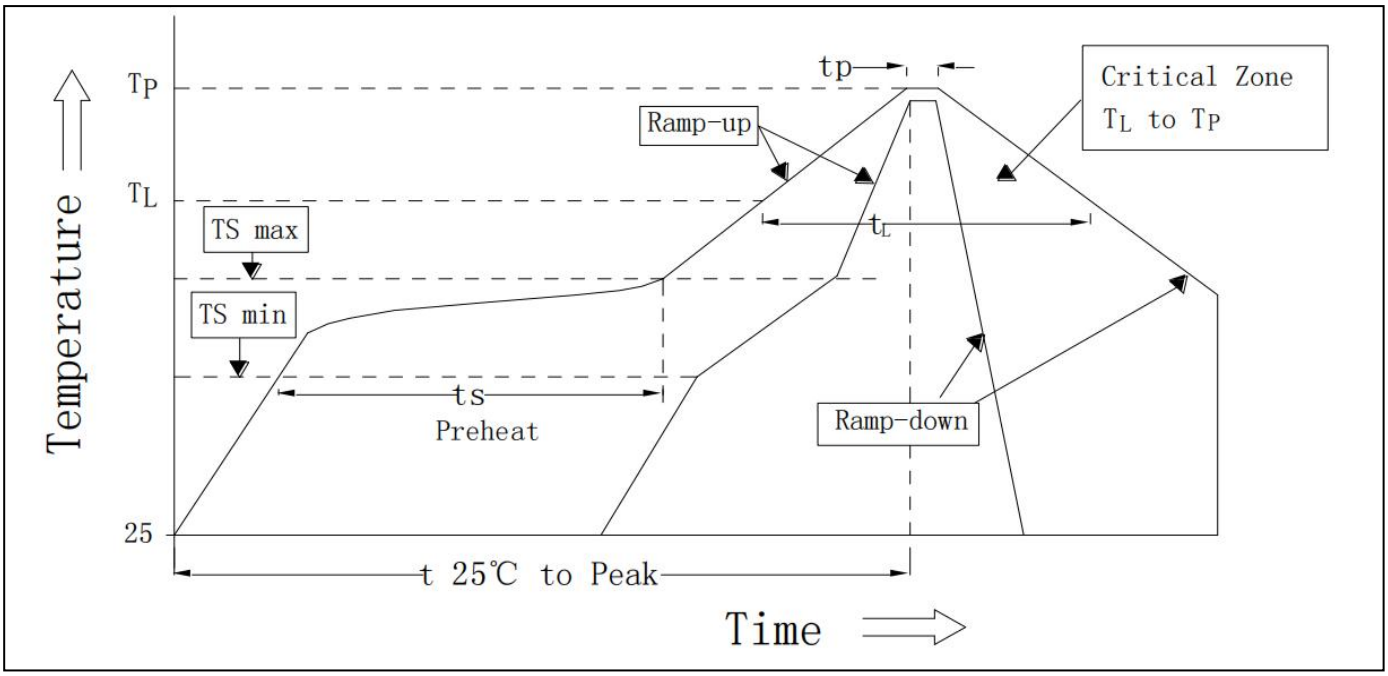

SMT Reflow Soldering Instructions SMT

Reflow parameters

Average temperature rise speed	Max 3 °C/ s
Preheating: minimum temperature	150 °C
Preheating: Max temperature	200 °C
Preheating: Time	60s-120s
Time limited to maintain high temperature: the temperature	217 °C
Time limited to maintain high temperature: The Time	Max 60s

Peak /Classification of temperature	245 °C
Time limit classification of peak temperature time	Max 10s
Hold time within 5 °C with the actual peak temperature (TP)	Max 30s
Cooling speed	Max 6 °C/ s
Needed time from 25 °C to Tp	Max 8 minutes

Note:

1. SMT 2 times available (within 24 hours).
2. When soldering , do not put stress on the LEDs during heating .

3.1.1 Soldering Iron

(1) When do soldering by hand, keep the temperature of iron below less 300C less than 3 seconds.
(2) Soldering by hand should be done only one time .

3.1.2 Repairing

Repairing should not be done after the LEDs have been soldered. When repairing is unavoidable, adouble-head soldering iron should be used (as below figure). It should be confirmed in advance whether the characteristics of LEDs will or not be damaged by repairing.

3.1.3 Cautions

(1) The encapsulated material of the LEDs is silicone. Therefore the LEDs have a soft surface on the top of package. The pressure to the top surface will be impacted on the reliability of the LEDs. Precautions should be taken to avoid the strong pressure on the encapsulated part. So when use the picking up nozzle, the pressure on the silicone resin should be proper.
(2) Components should not be mounted on warped (non coplanar) portion of PCB. After soldering, do not warp the circuit board.
(3) Do not apply mechanical force or excess vibration during the cooling process to normal temperature after soldering. Do not rapidly cool device after soldering.

4. Handling Precautions

4.1 Handling Precautions

* Compliance with RoHS and REACH

(1) LED operating environment and sulfur element composition cannot be over 100PPM in the LED mating usage material. This is provided for informational purposes only and is not a warranty or endorsement.
(2) In order to prevent ex-ternal material from getting into the inside of LED, which may cause the malfunction of LED, the single content of Bromine element is required to be less than 900PPM,the single content of Chlorine elementis required to be less than 900PPM,the total content of Bromine element and Chlorine element in the external materials of the application products is required to be less than1500PPM . This is provided for informational purposes only and is not a warranty or endorsement.
(3) VOCs (Volatile organic compounds) emitted from materials used in the construction of fixtures can penetrate silicone encapsulants of LEDs and discolor when exposed to heat and photonic energy. The result can be a significant loss of light output from the fixture. Knowledge of the properties of the materials selected to be used in the construction of fixtures can help prevent these issues. Yongyu advises against theuse of any chemicals or materials that have been found or are suspected to have an adverse affect on device performance or reliability.

To verifycompatibility, Yongyu recommends that all chemicals and materials be tested in the specific application and environment for which they are intended tobe used. Attaching LEDs, do not use adhesives that outgas organic vapor.

(4) Handle the component along the side surface by using forceps or appropriate tools; Do not directlytouch or Handle the silicone lens surface, it may damage the internal circuitry.

(5) Do not stack after SMT operation.

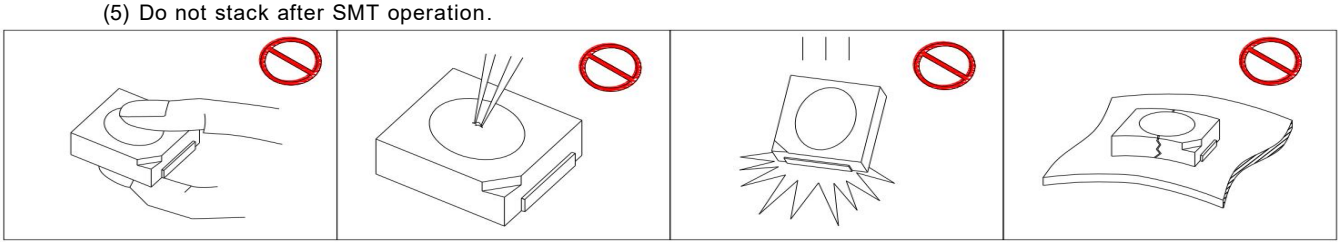

(6) In designing a circuit,the current through each LED can not exceed the absolute maximum rating specified for each LED.In the meanwhile,resistors for protection should be applied,otherwise slight voltage shift will cause big current change,burn out may happen. Thedriving circuit must be designed to allow forward voltage only when it is ON or OFF.If the reversevoltage is applied to LED, migration can be generated resulting in LED damage.

(7) Thermal Design is paramount importance because heat generation may result in the Characteristics decline,such as brightness decreased,Color change and so on.Please consider the heat generation of the LEDs when making the system design.

(8) Compared to standard encapsulants, silicone is generally softer, and the surface is more likely to attract dust,requiring special care during processing. In cases where a minimal level of dirt and dust particles cannot be guaranteed, a suitable cleaning solution must be applied to the surface after the soldering of components. Yongyu suggests using isopropyl alcohol for cleaning. In case other solvents are used, it must be assured that these solvents do not dissolve the package or resin. Ultrasonic cleaning is not recommended. Ultrasonic cleaning may cause damage to the LED.

Storage

Conditions		Temperature	Humidity	Time
	Before Opening Aluminum Bag	≤30℃	≤75%	Within 1 Year From Date
Storage	After Opening Aluminum Bag	≤30℃	≤60%	Recommended for use within 24 hours
Baking		60±5℃	-	≥24hours

(9) If the moisture absorbent material (silica gel) has faded away or the LEDs have exceeded the storage time,baking treatment should be performed after unpacking and based on the following condition (65±5)C for above 24 hours.
If the package is flatulence or damaged,please notify the sales staff to assist.
Similar to most Solid state devices; LEDs are sensitive to Electro-Static Discharge (ESD) and Electrical Over Stress (EOS).

(10) Other points for attention, please refer to our relevant information.

5. Specification Review History

Review Ver.	Date	Correction List	Etc.
A0	2024.04.03	First Edition Development	