APPROVAL SHEET

Customer:

Customer Part NO.

Part NO. CDS006M221D06PC97V00A

Item: 220uF 6.3V

Catalog Series: CDS Series

Date of Issue: APR.23.2026

Approved NO. : SD20260400004

BUYER'S STAMP	Approved by			

Su' scon	Submitted by			
	Approval	Check	Affirm	Design
東莞冠坤電子有限公司 發 行 2024-09-02 工程部	工程部 2024-09-02 鐘 華	工程部 2024-09-02 熊仙平	工程部 2024-09-02 呂明波	工程部 2024-09-02 賴彤影

Su' scon ®

DONG GUAN HEYUE ELECTRONIC CO., LTD

TEL:0769-8308 6886
FAX:0769-8308 6886
Mail：sales016@heyuecap.com

Halogen Free RoHS COMPLIANT Environmental-Benefit Products

RECORD OF REVISION

NO.	VERSION	REASON	DATE	CHECKED	REMARKS
1	A00	First Release	2026.04.23	王代燕	
2					
3					
4					
5					
6					
7					
8					
9					
10					
11					
12					
13					
14					
15					
16					
17					
18					
19					
20					
21					
22					
23					
24					
25					
26					
27					
28					
29					
30					

CDS Specification For Approval

NO.	Customer Part No.	Specification	*Su' scon* Part No.
1		EC,220uF/6.3V	CDS006M221D06PC97V00A
2			
3			
4			
5			
6			
7			
8			
9			
10			
10			
11			
12			
13			
14			
15			
16			
17			
18			
19			
20			
21			
22			
23			
24			
25			
26			
27			

Explanation of Parts Numbers (ERP System)

Draw Up:1999.12.15 **Revise:**2016.06.15	**Codification**:DKK/Ⅲ-00-002 **Edition**:A08

Explanation of Parts Numbers

1	2	3	4	5	6	7	8	9	10	11	12	13	14	15	16	17	18	19	20	21
C	**D**	**S**	**0**	**1**	**6**	**M**	**1**	**0**	**1**	**D**	**0**	**6**	**P**	**C**	**9**	**7**	**V**	**0**	**0**	**R/A**
[Series]			[Voltage]			[Capacitance Tolerance]	[Capacitance Code]			[Diameter]	[Length]		[Special Remark]	[Customer Code]			[Type Code description]			R=RoHS/Free Halogen A=Automotive products RoHS/Free Halogen

004=4V	J= ±5 %	0R1=0.1uF	C=4Φ
006=6.3V	K= ±10%	1R0=1uF	D=5Φ
010=10V	M= ±20 %	100=10 uF	5=5.5Φ
016=16V	A= 0 %~+20 %	101=100 uF	E=6.3Φ
025=25V	S= 0 %~+40 %	102=1000 uF	V=6.5Φ
035=35V	R= 0 %~+50 %	103=10000 uF	F=8Φ
050=50V	D= -5 %~+20 %	223=22000 uF	G=10Φ
063=63V	V= -10 %~+20 %	G52=1650 uF	H=12Φ
080=80V	Q= -10 %~+30 %		X=12.5Φ
100=100V	T= -10 %~+50 %		I=13Φ
160=160V	E= -15 %~+20 %	P=35Φ	Y=14.5Φ
350=350V / 180=180V	I= -30 %~+20 %	Q=40Φ	J=16Φ
400=400V / 200=200V	B= +10 %~+30 %	W=42Φ	K=18Φ
420=420V / 250=250V	N= +10 %~+25 %	8=45Φ	L=20Φ
450=450V / 315=315V	**C**= -5 %~+15 %	R=51Φ	M=22Φ
500=500V / 330=330V	**Z**= -0 %~+30 %	S=64Φ	N=25Φ
		T=76Φ	Z=25.4Φ
		U=90Φ	O=30Φ

1) Length < 100mm Integer,Input it direct.

2) Length < 100mm Decimal,Please refer the code as below: Ex:11.5 isBB; 5.4 is 5A;

3. Length ≧ 100mm,First digit input No.0~9，2nd 、3rd refer as below Code11 Ex:115,Input B5.

Code12	**Meaning**		
A	10		
B	11		
C	12		
D	13		
E	14		
F	15		
G	16		
H	17		
I	18		
J	19	M	22
K	20	N	31
Q	21	L	35

Code13	Meaning
A	0.4
B	0.5
C	0.6
D	0.7
E	0.8
F	0.9
G	0.1
H	0.2
I	0.3

RADIAL	B=Forming Only C=Lead Cut D=Lead Cut and Crimp N=Lead spacing expand to 2.0 mm then Cut E=Lead spacing expand to 2.5 mm then Cut F=Lead Forming spacing 5.0 mm thenCut H=Lead Forming Cut and Crimp S=Long Lead L=Facing cathode:Lead Cut and Bending (turn right) Z=Facing cathode:Lead Cut and Bending (turn left) P=Taping (Ammo pack) R=Tape and Reel V=V-chip Type (SMD)	<1>Code No.18 is"P",Code No.19、20 is stand for Lead pitch. <2>Code No.18 is C,N,E,F,D,H,W,K,L,Z, Code No.19、20 is stand for Lead length. <3>Code No.18 is S,Code No.19、20 be filled in "00" is stand for General Long Lead
Lug	G= LG Type Terminal PCS= PC board pin-out Straight Terminal PCY= PC board pin-out LUG Terminal PCU= PC board pin-out U-Insert Terminal PCB= PC board pin-out Bend Terminal ST= Straight Type Terminal U= 5 Pin Straight Terminal W= Screw Terminal YL= Snap	<4>Code No.18 is "B",Code No.19、20 be filled in "00" is stand for Forming Long Lead

Code 13	Meaning
T	Convex Rubber seal {Standard：Lead Type 12.5Φ≦D≦18Φ(Breathe freely}
P	Flat Rubber seal {Standard：Lead Type 4Φ≦D≦12Φ：20Φ、22Φ、25Φ}
0	Snap-in,U-LUG Type

KKK	For Standard Product which has no artfactitious. (Bulk, Long-lead, No particlar processing, rated spec.)
C97	Customer No.

2.ERP P/N System compare with NCC's Description

(1) "Finished Products" ----21 Codes，

(2) Snap in Type---- "Semi-finished products P/N" has not demand，It's also 21 Codes

(3) Lead Type---- 17 codes for "Semi-finished products" ，It's 17 codes (If Specially enquire and 17 codes can not be reached, It will be 21 code for that)

(4) Codes No.14：Specially Code，It's difference between clients enquire and same Spec multiple enquired.

(5) Codes No.15~17 which is for clients Code.

(6) Length of Lead Cut and Forming bigger than10.0mm or appendix digit，Letters Description。

DONG GUAN KUAN KUN ELECTRONIC CO., LTD

YIN HE INDUSTRIAL ZONE, QING XI TOWN, DONG GUAN CITY, GUANG DONG CHINA (P.R.O.C)
TEL: +86-769- 83086886
FAX: +86-769- 83086886

DIMENSIONS(mm)

■ Chip Type

FOR APPROVAL

Fig.1 ΦD=4~10mm

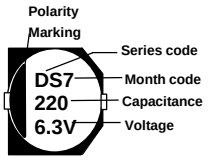

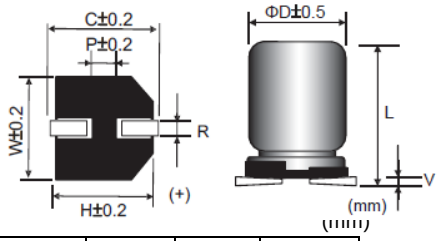

Size	ΦD	L	W	H	C	R	P	Vmax
4*6	4.0	6.0±0.3	4.3	4.3	5.1	0.5~0.8	1.0	0.3
5*6	5.0	6.0±0.3	5.3	5.3	5.9	0.5~0.8	1.4	0.3
6.3*6	6.3	6.0±0.3	6.6	6.6	7.2	0.5~0.8	2.1	0.3
6.3*7.7	6.3	7.7±0.3	6.6	6.6	7.2	0.5~0.8	2.1	0.3
8*10	8.0	10±0.5	8.3	8.3	9.0	0.7~1.1	3.2	0.3
10*10	10.0	10.5±0.5	10.3	10.3	11.0	0.7~1.3	4.5	0.3

Customer:	**Electrolytic Capacitors CDS Series**	**Code**

Electric Characteristics:

P/N	P/N	Cap. (uF)	Cap. Tol. (%)	Rate Volt. (V-DC)	Surge Volt. (V-DC)	Oper. Temp. (℃)	Nominal Case Size D*L(mm)	Leakage Current Max (uA)	D.F. MAX (%)	R.C 100KHz (mA rms)	ESR 100KHz at 25℃(Ω)Max	Load Life (hours)
	CDS006M221D06PC97V00A	220	±20	6.3	7.2	105	5*6	13	26	240	0.400	2000

REMARKS:

1. Leakage Current Test: **6.3V ~50V at 20℃ for 2 minutes ;**

2. Operating temperature: **6.3V~50V -55℃~ +105℃ ;**

3. .Dissipation Factor Test: **at 20℃, 120 Hz.**

4. Capactitance Test: **at 20℃, 120 Hz.**

5. Ripple Current Test: **at 105℃, 100K Hz ;**

6. Load Life: **2000 hours, with application of rated voltage at 105℃.**

Capacitance Change: **Within ±30% of initial value;**

tanδ: **200% or less of initial specified value;**

Leakage Current: **Initial specified value or less;**

7. Shelf Life: **The following specifications shall be satisfied when the capacitors are restored to 20℃ after exposing them for 1000 hours 105℃ without voltage applide. Before the measurement, the capacitor shall be preconditioned by applying voltage according to them 4.1 of JIS C5101-4.**

Capacitance Change: **Within ±30% of initial value;**

tanδ: **200% or less of initial specified value;**

Leakage Current: **Initial specified value or less;**

8. when have characteristic requested: **Load life & shelf life test and etc. , judgment standard reference to our catalogue.**

9.Remarks: **Su'scon Part Number with suffix code "A" is specially offered for automotive project, which meets AEC-Q200 standard.**

●SPECIFICATION

Leakage Current 洩漏電流	After 2 minutes application of rated voltage,leakage current is not more than 0.01cv or 3(uA),whichever is greater.						
Dissipation Factor 散逸因素（損失角） (tan δ)	Measurement Frequency:120Hz. Temperature:20℃						
	Rate Voltage(V)	6.3	10	16	25	35	50
	tan δ （MAX)	0.26	0.19	0.16	0.14	0.12	0.10
Low Temperature Stability 低溫特性 Impedance Ratio(MAX) 阻抗比率(MAX)	Measurement Frequency:120Hz.						
	Rate Voltage(V)	6.3	10	16	25	35	50
	Z(-25℃)/Z(20℃）	4	3	2	2	2	2
	Z(-55℃)/Z(20℃）	8	5	4	3	3	3

●Frequency Coefficient of Permissible Ripple Current

Capacitance(uF)	Frequency(Hz)			
	120 ≦ F< 1K	1K ≦ F< 10K	10K ≦ F< 100K	100K≦ F
≦470	0.65	0.85	0.95	1.00
>470	0.70	0.90	0.95	1.00

The endurance of capacitors is reduced with internal heating produced by ripple current at the rate of halving the lifetime with every 5℃ rise.
When long life performance is required in actual use, the rms ripple current has to be reduced.
Production date:2023.12.08

一. **Scope** 適用範圍 ：

This specification applies to Aluminum Electrolytic Capacitor , to measurement their performance by testing equipmer

本說明對于用電子儀器設備進行檢測之鋁電解電容器適用

二. Electrical/Mechanical Characteristics 電氣/機械特性:

<table>
<tr><td>1</td><td>SERIES</td><td>CDS</td></tr>
<tr><td>2</td><td>Rated voltage
額定電壓</td><td>6.3~50VDC</td></tr>
<tr><td>3</td><td>Operating
Temperature Range
應用溫度範圍</td><td>Operating temperature range is the range of allowable working temperature at
Which the capacitor can be operated continuously at rated voltage.
溫度範圍: 指電容器在額定電壓連續使用時, 其允許的溫度範圍。
spec: 6.3V~50V
-55℃~+105℃</td></tr>
<tr><td>4</td><td>Capacitance
靜電容量</td><td>Measuring Temperature
測 試 溫 度: 20±2℃
Measuring frequency :
測 定 頻 率: 120 Hz± 20%
Measuring voltage
測 定 電 壓: 0.5Vrms or less +1.5 to 2.0VDC
Measurement circuit :
測 定 電 路:〔 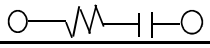 〕 spec: ±20%(M)</td></tr>
<tr><td>5</td><td>Dissipation factor
散逸因素(tan δ)</td><td>Measurement shall be made under the same conditions as those
given for the measurement of capacitance.
測試電容時,須符合以下之規定.
spec:
<table>
<tr><td>Rated Voltage (V)</td><td>6.3</td><td>10</td><td>16</td><td>25</td><td>35</td><td>50</td></tr>
<tr><td>tan δ(Max)</td><td>0.26</td><td>0.19</td><td>0.16</td><td>0.14</td><td>0.12</td><td>0.10</td></tr>
</table></td></tr>
<tr><td>6</td><td>Leakage current
洩漏電流</td><td>DC leakage current shall be measured after 2 minutes application of the
DC rated working voltage through the series resistor 1,000 Ω at 20℃.
在20 ℃下以工作電壓. 施加電流於串聯電容器之電阻1000Ω 2 分後 測定直流漏電流.
Measurement circuit 測定電路:
 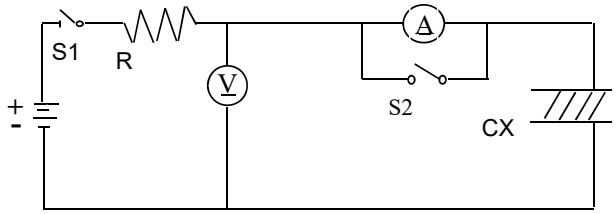

R : 1000 ± 100Ω
S1 : Switch 開關
(A) : DC current meter
直流電流計
S2 : Switch for protect of current meter
直流電流計的保護開關
(V): DC voltage meter
直流電壓計
CX :Test capacitor
測試電容

The following specifications shall be satisfied when the rated voltage
is applied for the required time.
印加額定工作電壓, 其通電時間.須符合下面要求.
spec: I≦0.01CV or 3(uA),which is greater.(After 2 minutes application of rated voltage)</td></tr>
</table>

7 Characteristics of temperature 溫度特性

STEP 步驟	TEMPERATURE 溫度	STORAGE TIME 放置時間
1	20℃ ± 2 ℃	30 minutes
2	-55℃ ± 3 ℃	2 hours
3	20℃ ± 2 ℃	30 minutes
4	105℃ ± 2℃	2 hours

Step 1. Measure the capacitance and impedance.
測定靜電容量及阻抗 (Z r0) .(｜Z｜, 20℃, 120Hz ± 10%)

Step 2. Measure the impedance at thermal balance after 2 hours.
達到熱平衡2小時後, 測定阻抗 (Zr) .(｜Z｜, -55 ℃, 120Hz ± 10%)
Impedance ratio (Zr / Z r0) less than specified value.
阻抗比 : 低于規定值 .

Step 4. Measure the capacitance and leakage current at thermal balance after 2 hours.
達到熱平衡2小時後, 測定靜電容量及漏電流 .
Capacitance change :within ± 20% of the initial measured value.
靜電容量變化 : 最初測定值的± 20%以內.
Leakage current :Less than 10 times of initial specified value .
漏電流 : 初期規格值的10倍以內.

Measuring frequency : 120HZ

spec:

Rated Voltage(V)	6.3	10	16	25	35	50
Z('-25℃)/Z(20℃)	4	3	2	2	2	2
Z('-40℃)/Z(20℃)	8	5	4	3	3	3

8 Surge voltage Test 突波試驗

Rated surge voltage shall be applied (switch on) for 30 ± 5 seconds and then shall be applied (switch off) with discharge for 5.5 ± 0.5 min. at room temperature . This cycle shall be repeated for 1,000 cycles . Duration of one cycle is 6 ± 0.5 minutes .

在常溫下,施加(開關通路)額定突波電壓 30 ± 5 秒,然後停止施加(開關斷路)突波電壓.

並放電 5.5 ± 0.5 分鐘.這個周期重复1000 次.以 6 ± 0.5分鐘為一循環周期 .

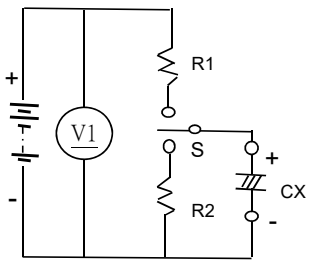

Surge voltage
突波電壓
Protective series resistor(1kΩ)
R1:保護電阻
Test capacitor
CX: 測試電容

DC voltmeter
V1 : DC 電壓計
Discharge resistor(1kΩ)
R2:放電電阻
Switch
S:開關

spec: Capacitance change : within ± 15% of the initial measured value.
靜電容量變化 :最初測定值的 ±15%以內.
Dissipation factor: initial specified value or less.
損失角 : 低于規定值
Leakage current : initial specified value or less.
漏電流 : 低于規定值

Rated Voltage(WV)	6.3	10	16	25	35	50
Surge Voltage(SV)	7.2	11.5	18.4	28.8	40.3	57.5

9	Adhesion Test 密著性試驗方法	Reasonable pulling strength:0.1~0.7N 最適當拉張度之強度:0.1~0.7N Pulling speed:300mm/min 拉扯之速度:300mm/min 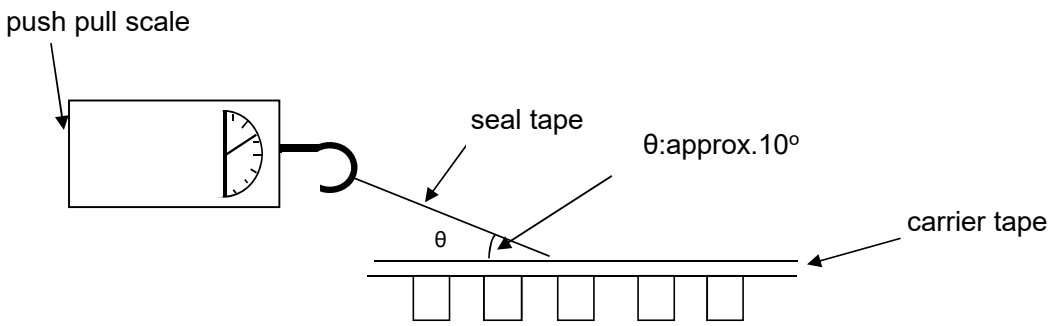
10	Solder ability 焊 錫 性	The leads are dipped in the solder bath of Sn at 245 ± 5 ℃ for 3 ± 0.5 seconds . The dipping depth should be set at 1.5 ~ 2.0 mm . 端子浸沒在 245 ± 5 ℃ 的錫焊液中 3 ± 0.5 秒 . 浸沒深度設定為 1.5 ~ 2.0 mm . spec: The solder alloy shall cover the 95% or more of the dipped lead's area . 錫液要覆蓋導針浸入表面積的 95% 以上 .
11	Resistance to soldering heat 焊錫耐熱性	The leads immerse in the solder bath of Sn at 250 ± 5 ℃ for 30 ± 1 seconds until a distance of 1.5~ 2mm from the case . 導針在 250 ± 5 ℃ 的錫 焊液中浸沒至離本 體 1.5 ~ 2 mm 的地方 30 ± 1 秒鍾 . spec: No damage or leakage of electrolyte . 無損傷或電解液漏出 . Capacitance change :within ± 10% of the initial measured value . 容量變化 : 最初測定值的 ± 10%以內 . Dissipation factor : initial specified value or less. 損失角 : 低於規定值 . Leakage current : initial specified value or less. 洩漏電流 : 低於規定值 .
12	Vibration 耐振性	The frequency of the vibration shall vary uniformly within the range 10 to 55 Hz with the amplitude of 1.5 mm , completing the cycle in the internal of one minute . The capacitor shall be securely mounted by its leads with hold the body of capacitor . The capacitor shall be vibrated in three mutually perpendicular directions for a period of 2 hours in each direction .(a total 6 hours) 振動頻率要均勻 , 範圍為 10 Hz, 到 55 Hz , 振 幅為 1.5 mm , 在 1 分鍾內完成該循環 . 電容器將由端子牢固地固定 . 電容器會被向三個互相垂直的方向每個方向 振動 2 小時 . (總時間為6小時) spec Capacitance : no unsteady . 靜電容量 ： 穩定 . Appearance : no abnormal . 外 觀 ：無異常 . Capacitance change: within ± 5% of initial measured value. 容量變化 : 最初測定值的± 5% 以內 .

13	Damp heat (steady state) 耐 濕 性 (穩定狀態)	Subject the capacitors to 40 ± 2 ℃ and 90% to 95% relative humidity for 500 ± 8 hours . 電容器在 40 ± 2 ℃ 及相對濕度 90% ~ 95% 的條件下經歷 500 ± 8 小時 . spec: Capacitance change :within ± 10% of the initial measured value . 容量變化 : 最初測定值的 ± 10%以內 . Dissipation factor : initial specified value or less. 損失角 : 低於規定值 . Leakage current : initial specified value or less. 洩漏電流 : 低於規定值 .
14	Shelf life 高溫無負荷	The following specifications shall be satisfied when the capacitors are restored to 20℃. after exposing them for 1,000 hours at 105℃, without voltage applied. During testing The rated voltage shall be applied to the capacitors for a minimum of 30 minutes, at least 24 hours and not more than 48 hours before the measurements. 在未加電壓下情形下,電容器放置於環境溫度 105℃ 1000 小時後 在 20℃ 的環境下測試需符合標準. 測試時須放於室溫最最少24小時不超過48小時, 印加額定電壓30分鐘進行測試. spec: 1,000hours, no voltage applied, at 105℃. After Test:UR to be applied for 30 minutes, 24 to 48 hours before measurement. They meet the specified value for endurance characteristics listed above.
15	Load life 高溫負荷	The following specifications shall be satisfied when the capacitors are restored to 20℃ after the rated voltage applied for 2,000 hours,at 105℃ 印加額定電壓情形下, 電容器置於環境溫度 105℃2,000 小時後 在 20℃環境下測試需符合標準. spec: Capacitance change : within ± 30% of the initial measured value. 靜電容量變化 :最初測定值的 ±30%以內. Dissipation factor : 200% or less of initial specified value. 損失角 : 低於最初規定值的 200%. Leakage current : initial specified value or less. 洩漏電流 : 低於規定值
16	Storage at low temperature 低 溫 貯 存	The capacitor shall be stored at temperature of -40 ± 3℃ for 16(-0/+2) hours , during which time no voltage shall be applied . And then the capacitor shall be subjected to standard atmospheric conditions for 16 hours or more , after which measurements shall be made . 電容器貯存在 -40 ± 3 ℃中 達 16(-0/+2) 小時 , 其間不施加電壓 . 之後 , 在標準大氣壓中露置 16 小時以上 , 然後進行測試 . spec: Capacitance change : within ± 10% of the initial measured value. 電容量變化 :最初測定值的 ± 10%以內. Dissipation factor : initial specified value or less. 損失角 : 低於規定值 . Leakage current : initial specified value or less. 洩漏電流 : 低於規定值 . Appearance : no abnormal . 外 觀 : 無異常 .

17	Reflow Soldering Temperature Profile 回焊爐測試	**Reflow Soldering Test**

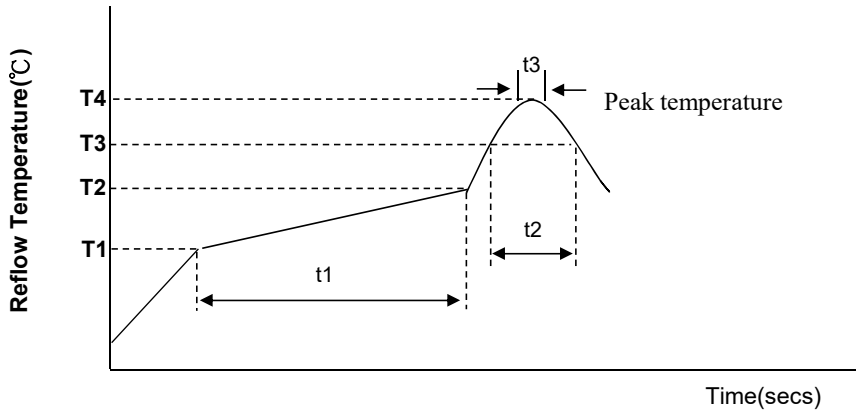

Test conditions

Profile Feature	Pb Free Assembly	
	4~6.3Ø	8~10Ø
Average Ramp-up Rate	3℃/second max	3℃/second max
Preheat Temperature Min(T1 min) Temperature Max(T2 max) Time (t1 Max)	 150℃ 180℃ 120secs	 150℃ 180℃ 120secs
Ramp-up Rate (T2 ~T3)	3℃/second max	3℃/second max
Time maintained above Temperature(T3) Time(t2 Max)	217℃ 90secs	217℃ 40secs
Peak Temperature(T4)	260℃	245℃
Time(t3 Max)	5secs	5secs
Reflow cycles	1	2 or less

* Please ensure that the capacitor became cold enough to the room temperature(5~35℃) before the second reflow.

18	Standards 參考標準	JIS C-5101-4(IEC 60384)

Marking :

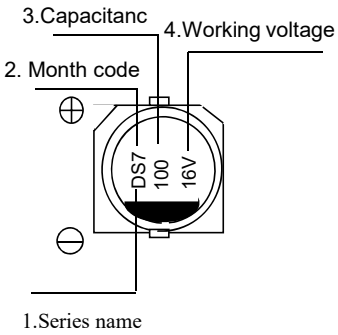

1.Series name:

Code	S	H	N	K	D	G	DS
Series	CS	CH	CN	CK	CD	CG	CDS

2.Month code:

Code	1	4	7	O
Month	1~3	4~6	7~9	10~12

3.Capacitance:

Code	10	100	1000
Capacitance ('uF)	10	100	1000

4.Working voltage:

Code	4V	6.3V	10V	16V	25V	35V	50V
WV (V)	4V	6.3V	10V	16V	25V	35V	50V

鋁電解電容器存放環境與控制

Storage Conditions and Control for Aluminum Electrolytic Capacitor

1. 環境溫度 **: 5**℃ **~ 35**℃**,** 環境相對濕度 : 75%以下 **.**

Store the capacitor at a temperature of 5℃ **to 35**℃ **and at a relative humidity of less than 75% .**

2. 存放環境不應有陽光直射**,** 不宜高溫 **.**

Store the capacitor in low temperature places free from direct sun shine .

3. 存放環境不能有鹽分、油含量高的霧气 **.**

Store the capacitor in places free from oil vapor、salt water vapor.

4. 存放在遠離氯气、氨气、硫化氫、亞硫酸、硝酸等有害氣體含量高的地方.

Store the capacitor in places far from toxic gases (chlorine、ammonium、hydrogen sulfide、 sulphurous acid、nitric acid , etc) .

5. 儲存環境不能有臭氧、紫外線或幅射**.**

Store the capacitor in place free from Ozone、ultraviolet ray or radiation .

Detergent needing attention:

使用清潔劑之注意事項:

Hydrogen carbide liquid and halogen liquid can cause Aluminium Electrolytic Capacitor to corrode. Some of Safe and Unsafe detergent are as follows;

鋁質電解電容器會受含有碳化氫鹵素容劑之侵蝕,下列為各種安全與不安全之清潔劑,為避免不必要的損失,您所使用有關印刷基板之清潔劑名請事先告知本公司.

Safe 安全	**Unsafe 不安全**
Methanol **甲醇**	**1.1.2- trichloroethane** **1.1.2- 三氯乙烷**
Ethanol **乙醇**	**Tetrachloroethylene** **四氯化碳**
Propanol **丙醇**	**Chloroform(colorless volatilizable liquid)** **哥羅仿(無色揮發性液體)**
Butanol **丁醇**	**Dichloromethane** **二氯甲烷**
Detergent **去垢劑**	**Trichlorelethylene** **三氯甲烯**
	Dimethybenxene **二甲苯**

V-Chip Aluminum Electrolytic Capacitors

Structure and materials

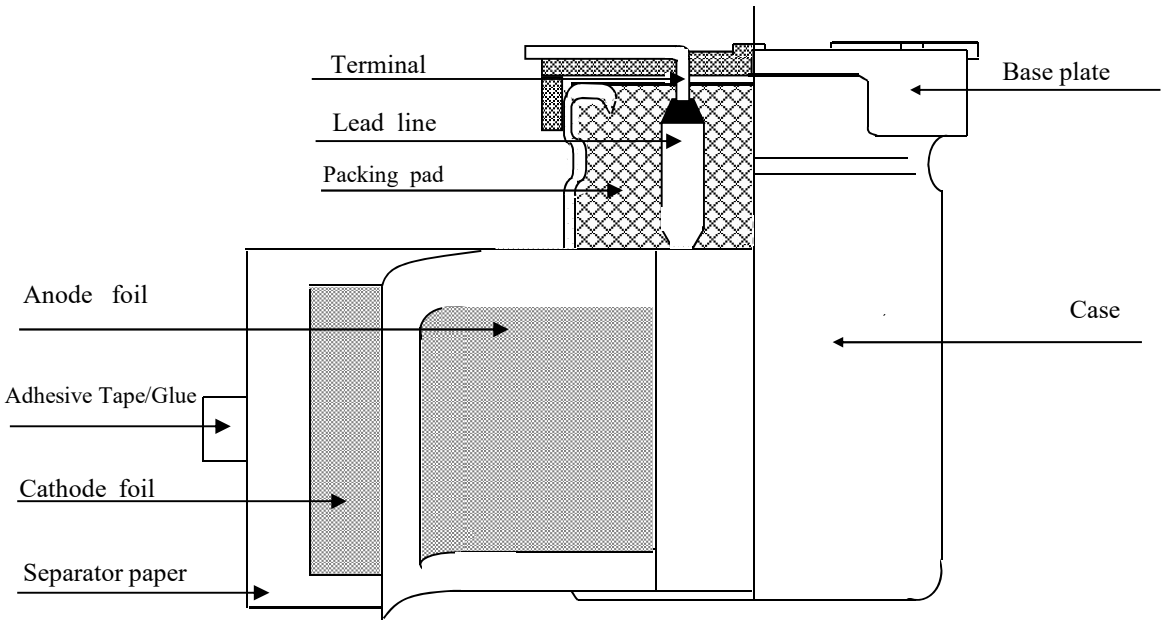

V-Chip type capacitors component

Part name	Materials
Terminal	Tin Coated Copper Covered Steel Wire
Lead line	Aluminum 99.90%
Packing pad	Synthetic rubber
Anode Foil	Formed aluminum 99.9% over
Cathode Foil	Formed aluminum 98.1% over
Separator paper	Manila Espartos
Adhesive Tape/Glue	Phenylene Sulfide ;Glue:PVA
Base plate	Polyphenylene oxide;Glass fibre
Case	Aluminum 98%+PU coating

6. PRECAUTIONS AND GUIDELINES TO USERS

When using aluminum elelctrolytic capacitors, pay strict attention to the following:

1. Electrolytic capacitors for DC application require polarization.

Confirm the polarity. If uesd in reversed polarity, the circuit life may be shortened or the capacitor may be damaged. For use on circuits whose polarity is occasionally reversed, or whose polarity is unknown, use bi-polarized capacitors(BP-series). Also, note that the electrolytic capacitor cannot be used for AC application.

2. Do not apply a voltage exceeding the capacitor's voltage rating.

If a voltage exceeding the capacitor's voltage rating is applied, the capacitor may be damaged as leakage current increases. When using the capacitor with AC voltage superimposed on DC voltage, care must be exercised that the peak value of AC voltage does not exceed the rated voltage.

3. Do not allow excessive ripple current to pass.

Use the electrolytic capacitor at current values within the permissible ripple range. If the ripple current exceeds the specified value, request capacitors for high ripple current applications.

4. Ascertain the operating temperature range.

Use the electrolytic capacitors according to the specified operating temperature range. Usage at room temperature will ensure longer life.

5. The electrolytic capacitor is not suitable for circuits in which charge and discharge are frequently repeated.

If used in circuits in which charge and discharge are frequently repeated, the capacitance value may drop, or the capacitor may be damaged. Please consult our engineering department for assistance in these applications.

If the electrolytic capacitor is allowed to stand for a long time, its withstand voltage is liable to drop, resulting in increased leakage current. If the rated voltage is applied to such a product, a large leakage current occurs and this generates internal heat, which damaged the capacitor. If the electrolytic capacitor is allowed to stand for a long time, therefore, use it after giving voltage treatment.(However,the electrolytic capacitors can be guarantee for 2 years if keep in the normal temperature.)

6. Be careful of temperature and time when soldering.

When soldering a printed circuit board with various components, care must be taken that the soldering temperature is not too high and that the dipping time is not too long. Other wise, there will be adverse effects on the electrical characteristics and insulation sleeve of electrolytic capacitors in the case of small-sized electrolytic capacitors, nothing abnormal will occur if dipping is performed at less than 260 ℃ for less than 10 seconds.

7. Do not place a soldering iron body of the capacitor.

The electrolytic capacitor is covered with a vinyl sleeve. If the soldering iron comes in contact with the electrolytic capacitor body during wiring, damage to the vinyl sleeve and/or case may result in defective insulation, or improper protection

8. Cleaning circuit boards after soldering.

Some solvents have adverse effects on capacitors.

Please refer to the next page.

9. Do not apply excessive force to the lead wires or terminals.

If excessive force is applied to the lead wires and terminals, they may be broken or their connections with the internal elements may be affected. (For strength of terminals, refer to JIS C5101-1, JIS C5101-4)

10. Care should be used in selecting a storage area.

If electrolytic capacitors are exposed to high temperatures caused by such things as direct sunlight, the life of the capacitor may be adversely affected. Storage in a high humidity atmosphere may affect the solderability of lead wires and terminals.

11. Surge voltage:

Rated surge voltage shall be applied for 30 seconds and then shall be applied with discharge,for 330 seconds at room temperature .This cycle shall be repeated for 1000 cycles;Duration of one cycle is 6 minutes ;then to judge capacitor’s characteristics and appearance.

Rated Voltage(WV)	4	6.3	10	16	25	35	50	63	80	100
Surge Voltage(SV)	4.6	7.2	11.5	18.4	28.8	40.3	57.5	72.5	92	115

For methods of testing, refer to JIS C 5101-1, JIS C 5101-4.

※ The above mentioned material according to EIAJRCR-2367B (issued in March, 2002), titled "Guideline of notabilia for aluminum electrolytic capacitors for use in electronic equipment". Prease refer to the book for details.

Su'scon CAPACITORS PACKING INFORMATION

● V-CHIP REEL

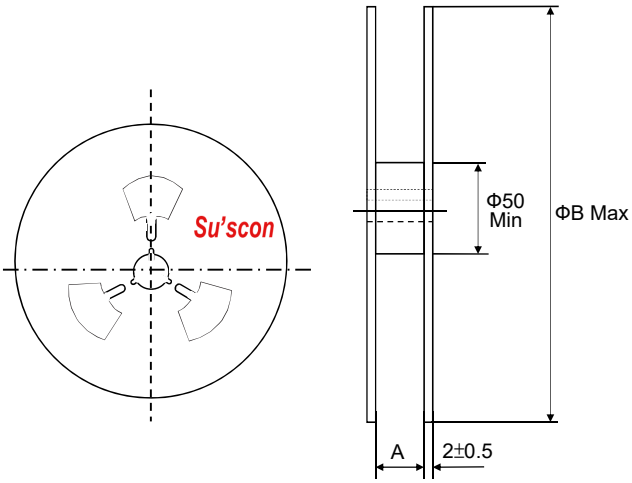

Package Quantity	
Size(Φ×L)	Q'ty/reel
Φ4	2000pcs
Φ5	1000pcs
Φ6.3×4~8L	1000pcs
Φ6.3×8.4L	800pcs
Φ8× (6~7L)	1000pcs
Φ8× (10~11)	500pcs
Φ10× (7~11)	500pcs
Φ10× (12~13)	400pcs
Φ10× (16~17)	300pcs
Φ12.5 × (13~14)	250pcs
Φ12.5/16 × (16~17)	200pcs
Φ16× (21~22)	125pcs
Φ18× (16~17)	150pcs
Φ18× (21~22)	100pcs

(單位：mm)

Size	φ4~5	φ6.3	φ8	φ10	φ12.5	φ16	φ18
A	14	18	26	26	34	46	46
B	382	382	382	382	382	382	382

■ V-CHIP PACKAGE

●Carrier tape

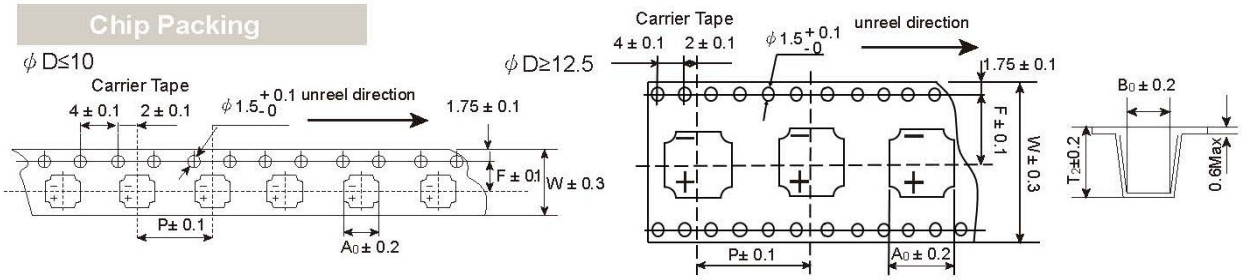

(單位：mm)

Size (Φ×L)	Item					
	W	P	F	A_0	B_0	T_2
4 × 5.3~5.6L	12.0	8.0	5.5	5.0	5.0	5.8
4 × 5.7~6.3L	12.0	8.0	5.5	5.0	5.0	6.3
4 × 7L	12.0	8.0	5.5	5.0	5.0	7.5
5 × 5.3~5.6L	12.0	12.0	5.5	5.0	5.0	5.9
5 × 5.7~6.3L	12.0	12.0	5.5	5.0	5.0	6.3
5 × 6.4~7.0L	12.0	12.0	5.5	5.0	5.0	7.6
6.3 × 4.5L	16.0	12.0	7.5	7.0	7.0	4.8
6.3 × 5.4~5.6 L	16.0	12.0	7.5	7.0	7.0	5.9
6.3 × 5.7~6.3L	16.0	12.0	7.5	7.0	7.0	6.5
6.3 × 7~8L	16.0	12.0	7.5	7.0	7.0	8.3
6.3 × 8.1~9L	16.0	12.0	7.5	7.0	7.0	9.3
8 × 6~7L	16.0	12.0	7.5	8.7	8.7	6.9
8 × 10~11L	24.0	16.0	11.5	8.7	8.7	11
10 × 7.7L	24.0	16.0	11.5	10.7	10.7	8.7
10 × 10~11L	24.0	16.0	11.5	10.7/11.4(G)	10.7/11.4(G)	11/11.4(G)
10 × 12~13L	24.0	16.0	11.5	10.7	10.7	13.1
10 × 16~17L	24.0	16.0	11.5	10.7	10.7	17.5
12.5 × 13~14L	32.0	24.0	14.2	13.4	13.4	15
12.5 × 16~17L	32.0	24.0	14.2	13.4	13.4	17.5
16× 16~17L	44.0	28.0	20.2	17.5	17.5	17.5
16× 21~22L	44.0	28.0	20.2	17.5	17.5	23
18× 16~17L	44.0	32.0	20.2	19.5	19.5	17.5
18× 21~22L	44.0	32.0	20.2	19.5	19.5	23

(G)" "Anti-vibration Structure"

使用時注意事項:Precautions for users

1.輕拿輕放handle gently

2.取出托盤時,請用手托住紙盤底部,以免電容鬆散.When take the tray out, pls support the bottom of the paper plate with your hands to avoid loose